TRAINING GUIDE FOR OPERATORS OF

SMALL LP GAS SYSTEMS

Prepared for
United States Department of Transportation,
Research and Special Programs Administration,
Office of Pipeline Safety
by the
National Association of Regulatory Utility Commissioners
Staff Subcommittee on Pipeline Safety

TO THE READER

The U.S. Office of Pipeline Safety promotes the safe transportation by pipeline of natural gas, LP gas, liquefied natural gas and hazardous liquids. This guidance manual for operators of small LP gas systems is part of our commitment to pipeline safety. This manual was developed to provide a broad overview of pipeline compliance responsibilities under federal pipeline safety regulations. It has been designed for the non-technically trained person who operates a master meter system, a small municipal system or a small independent system.

The federal government recognizes that most operators of small LP gas systems have not had extensive training in operation and maintenance of a gas system. In addition, many of the safety regulations are in technical language that addresses generic requirements for both large and small LP gas systems. Therefore, this manual attempts to simplify the technical language of the regulations.

For certain critical regulations, this manual provides specific details of methods of operation and selection of materials that will satisfy the pipeline safety regulations. However, this is often only one of several allowable options. To assure compliance in many areas of the pipeline safety regulations, this manual provides a set of examples that the operator of small systems can use to meet the minimum requirements of the pipeline safety regulations.

This training guide relies on sources representing the best opinion on the subject at the time of publication. However, it should not be assumed that all acceptable safety measures and procedures are mentioned in this manual. The LP operator is referred to 49 CFR Part 192 and NFPA 58 for additional details and other options for reaching and maintaining compliance.

Our aim is to provide basic information to LP operators of small gas distribution and master meter systems to ensure compliance with the Federal gas pipeline safety regulations.

It is hoped that this document will assist you in achieving and maintaining a safe and efficient LP system. The result will be to enhance public safety - the essential goal for the Office of Pipeline Safety.

Stacey Gerard
Associate Administrator, Office of Pipeline Safety
Research and Special Programs Administration

ACKNOWLEDGEMENTS

The LP Gas Training Guide was initiated by the National Association of Regulatory Utility Commissioners Staff Subcommittee on Pipeline Safety.

The project was sponsored by the United States Department of Transportation, Research and Special Programs Administration, Office of Pipeline Safety.

The following committee members are recognized as experts in their fields and have given generously of their unique knowledge. They were directly involved in the development of this training guide.

Richard G. Marini, P.E. (Committee Chair)
New Hampshire Public Utilities Commission

Kenneth W. Wood
Vermont Department of Public Service

Bill Lowry, P.E.
USDOT/RSPA/OPS Central Region

Vicki O'Neil
Florida Department of Agriculture and Consumer Services

Jack Edwards
USDOT/RSPA/Transportation Safety Institute

Theodore C. Lemoff, P.E.
National Fire Protection Association

Bennie Andrews
USDOT/RSPA/OPS Southern Region

This guidance manual was implemented under the sponsorship of the U.S. Department of Transportation. The manual relies on sources representing the best opinion on the subject at the time of publication. However, it should not be assumed that all acceptable safety measures and procedures are mentioned in this manual. The reader is referred to the Code of Federal Regulations (49 CFR Parts 190-199, Part 40 and also NFPA 58 and 59) for the complete pipeline safety requirements.

TABLE OF CONTENTS

INTRODUCTION Intro-1

Definitions and Terms Intro-5
Commonly Abbreviated Organizations Intro-7

CHAPTER I
REPORTS REQUIRED BY THE FEDERAL GOVERNMENT I-1

Incident Reports I-1
Safety-Related Condition Reports I-2
Annual Reports I-3

CHAPTER II
PLANS REQUIRED BY THE FEDERAL GOVERNMENT II-1

Operations and Maintenance Plan II-1
Operations Plans II-1
Operating Pressure II-1
Pressure Testing II-2
Tapping and Purging II-3
Odorization II-3
Testing for Reinstating Service Lines II-4
Abandonment or Deactivation of Facilities II-4
Construction Records, Maps and Operating History II-5
Unaccounted for Gas II-5
Maintenance Plans II-6
Pressure Limiting Devices II-7
Patrolling II-8
Key Valves II-8
Accidental Ignition of Gas II-9
Leak Survey II-9
Corrosion Testing II-10
Emergency Plans II-11
Public Education Plan II-17

CHAPTER III
MATERIALS AND EQUIPMENT QUALIFIED
FOR USE IN PROPANE GAS SYSTEMS III-1

Introduction III-1
Tanks III-1
Pipe III-2
Tubing III-3
Fittings III-3
Valves III-7
Overpressure Protection Equipment III-8

CHAPTER IV
CONSTRUCTION AND REPAIR IV-1

Planning Ahead IV-1
Pipe Installation, Repair and Replacement: General Comments IV-2
Metallic Pipe Installation IV-2
Plastic Pipe Installation IV-3
Repair Methods - Plastic and Metal IV-15

CHAPTER V
PROPER LOCATION AND DESIGN OF TANKS
REGULATORS AND METER SETS V-1

Tanks, Regulators and Meters: Location V-1
Tanks, Regulators and Meters: Protection from Damage V-2
Customer Meter Installations: Operating Pressure V-3
Service Lines: Location of Valves V-4
Service Lines: Under a Building V-5
Common Problems at Risers, Service Regulators and
Customer Meters V-5

CHAPTER VI
ONE-CALL DAMAGE PREVENTION PROGRAM VI-1

One-Call Systems VI-1
Excavation VI-1
Emergency Excavation VI-2
Precautions to Avoid Damage VI-2
Repair of Excavation Damage VI-2

CHAPTER VII
OPERATOR QUALIFICATION VII-1

General Requirements VII-1
Covered Task VII-1
Operator Qualification Program VII-1
Recordkeeping VII-2

CHAPTER VIII
CORROSION CONTROL VIII-1

Federal Requirements VIII-1
Procedures and Qualifications VIII-1
Techniques for Compliance VIII-1
Corrosion Control Requirements for Pipelines Installed After July 31, 1971 VIII-1
Corrosion Control Requirements for Pipelines Installed Before August 1, 1971 VIII-2
Coating Requirements VIII-3
Examination of Exposed Pipe VIII-3
Criteria for Cathodic Protection VIII-3
Monitoring VIII-3
Electrical Isolation VIII-4
Test Points VIII-4
Internal Corrosion Inspection VIII-4
Atmospheric Corrosion VIII-4
Remedial Measures VIII-4
Records VIII-4
Some Principles and Practices of Cathodic Protection VIII-4
Basic Terms VIII-5
Fundamental Corrosion Theory VIII-14
Types of Cathodic Protection VIII-16
Galvanic Anode Systems VIII-16

Impressed Current Systems VIII-17
Initial Steps in Determining the Need to Cathodically Protect a Small Gas Distribution System VIII-17
Criteria for Cathodic Protection VIII-20
Coatings VIII-21
Mill Coated Pipe VIII-21
Patching VIII-22
Coating Application Procedures VIII-22
Common Causes of Corrosion in Gas Piping Systems VIII-23

CHAPTER IX
LP GAS REGULATORS IX-1

Basic Concepts for LP Gas Regulators IX-1
Components of a Typical Regulator IX-2
How a Regulator Works IX-3
Typical positive back pressure regulator IX-3
Relief operation IX-3
Positive back pressure regulators IX-4
Negative direct acting regulators IX-4
Types of Regulator Systems IX-5
Regulator Selection IX-9
Installation IX-9

CHAPTER X
GAS LEAKAGE CONTROL GUIDELINES FOR PETROLEUM GAS SYSTEMS X-1

Scope X-1
General Discussion X-1
Definitions X-1
Leakage Detection X-3
Qualification of Personnel X-3
Reports from Outside Sources X-3
Odors or Indications from Foreign Sources X-3
Leakage Surveys and Test Methods X-4
Subsurface gas detection survey X-4
Bubble leakage test X-5
Pressure drop test X-6
Ultrasonic leakage test X-6

Typically Available instruments for the Detection of Gas X-7
Type and general usage X-7
Maintenance of instruments X-7
Calibration of instruments X-7
Conversion curves X-8
Leakage Classification and Action Criteria X-9
General X-9
Leak Grades X-9
Leak Classification and Action Criteria X-9
Follow-up Inspection X-9
Reevaluation of a Leak X-10
Table 3a-Leak Classification and Action Criteria-Grade 1 X-10
Table 3b-Leak Classification and Action Criteria-Grade 2 X-11
Table 3c-Leak Classification and Action Criteria-Grade 3 X-12
Records and Self Audit Guidelines X-12
Leak Records X-12
Leak Survey Records X-13
Self Audits X-14
Pinpointing X-14
Scope X-14
Procedure X-14
Precautions X-15

Appendix A-Federal and State Listings A-1

Appendix B-Sample Forms B-1

INTRODUCTION

Public Law 104-304 requires the U.S. Department of Transportation (DOT) to develop and enforce minimum safety regulations for the transportation of gases by pipeline. Safety regulations became effective in 1970, and are published in Title 49 of the Code of Federal Regulations (CFR), Parts 190, 191, 192, 199 and Part 40. The Office of Pipeline Safety (OPS) of DOT's Research and Special Programs Administration (RSPA) is charged with their enforcement.

The purpose of this manual is to identify and clarify those regulations which apply to jurisdictional LP gas operators.

Jurisdictional system scenarios:

1) More than one customer from a single source in a public place (The term "public place" means a place which is generally open to all persons in a community as opposed to being restricted to specific persons. Churches, schools, and commercial buildings as well as any publicly owned rights-of-way or property which if frequented by persons are public places).

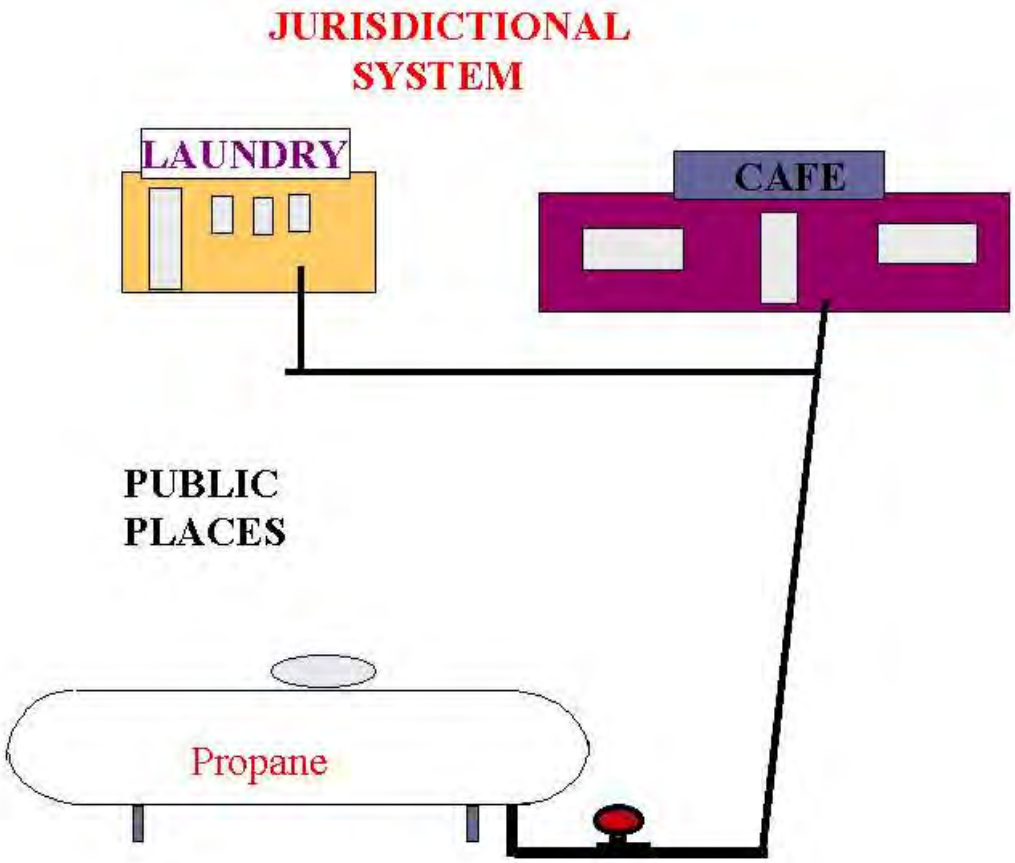

2) Ten or more customers from a single source (source can be a single tank or tanks manifolded together). The location does not matter.

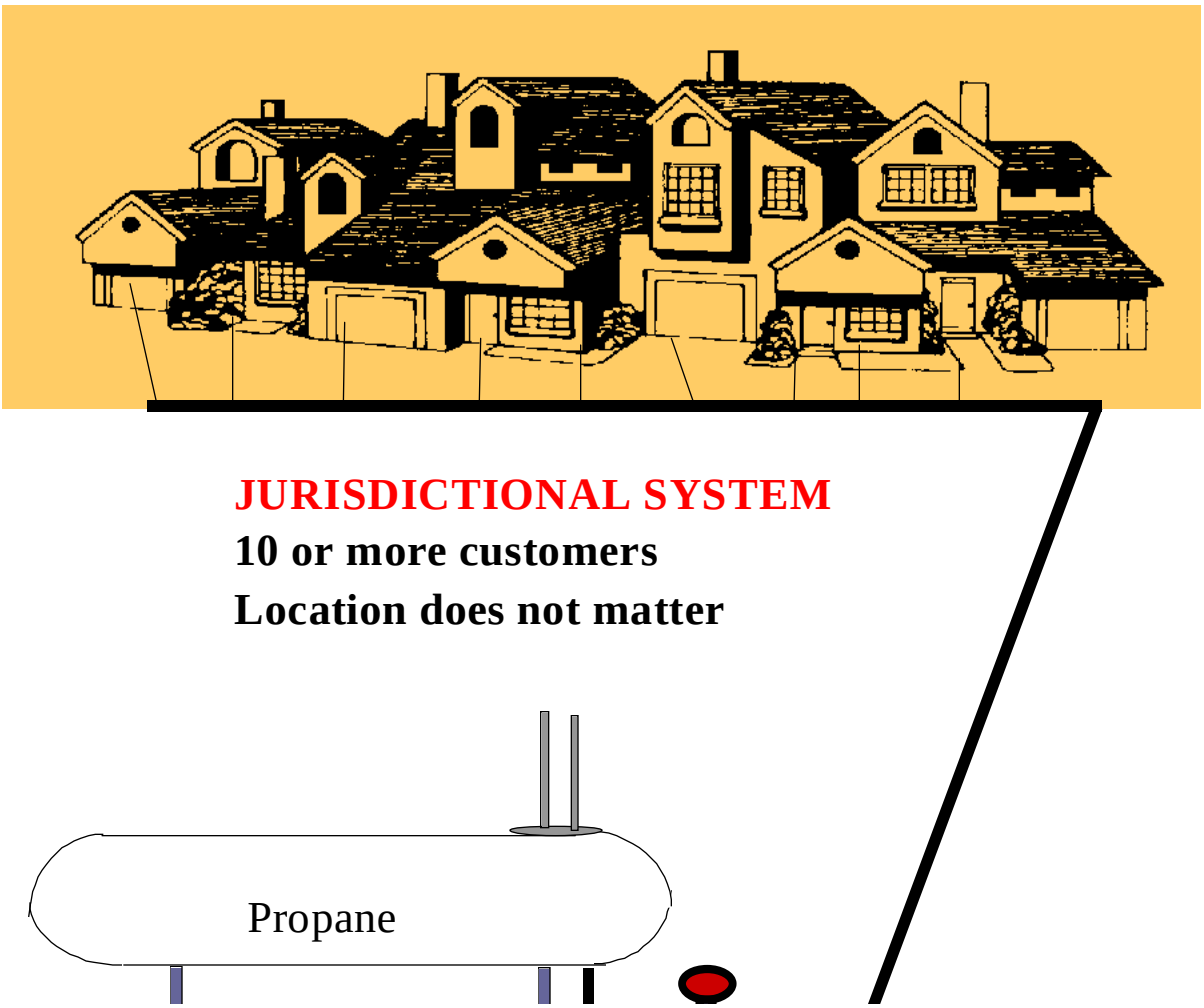

3) A single customer is not jurisdictional if the system is located entirely on the customer's premises (no matter if a portion of the system is located in a public place).

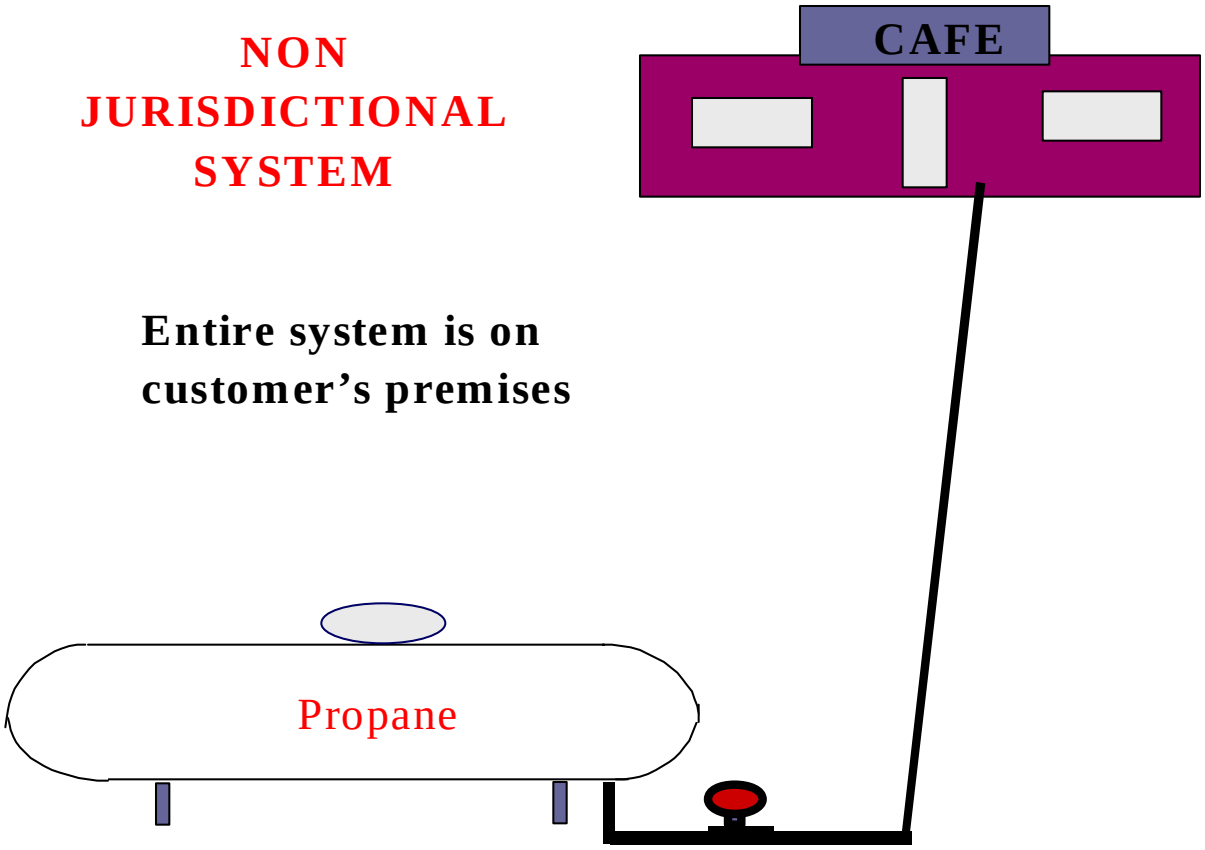

The pipeline safety regulations require operators of LP gas systems to:

- deliver gas safely and reliably to customers;
- provide training and written instructions for employees;
- establish written procedures to minimize the hazards resulting from LP gas pipeline emergencies; and
- keep records of inspection and testing based on suggested forms found in Appendix B.

LP gas operators that do not comply with the safety regulations may be subject to civil penalties, compliance orders or both. If safety problems are severe, a "Hazardous Facility Order" may be issued by federal or state pipeline safety inspectors. This could result in the shutdown of the system.

Often, state agencies enforce pipeline safety regulations under certification by OPS. The state agency is allowed to adopt additional or more stringent safety regulations for intrastate pipeline transportation as long as such regulations are compatible with the federal minimum regulations. However, if a state agency is not certified, the U.S. Department of Transportation retains jurisdiction over intrastate pipeline systems.

Operators should check with the pipeline safety agency in their state (**listed in Appendix A**) to determine:

- whether a state agency has safety jurisdiction over their specific type of LP gas system;
- whether the state agency has pipeline safety requirements that exceed the federal regulations; and
- the inspection and enforcement procedures of the state agency.

DEFINITIONS AND TERMS

To understand this manual, LP gas system operators need to know the meaning of some commonly used terms in the gas industry. The terms are defined below for the purpose of this guidance manual. The reader is referred to 49 CFR Part 192 and ANSI/NFPA Standards for additional definitions.

Cathodic protection - a procedure by which underground metallic pipe is protected against rust. Basic theory, concepts and practical considerations for cathodic protection are contained in Chapter VIII.

Customer meter - a device that measures the volume of gas transferred from an operator to the consumer.

LP gas operator - an LP gas operator could be a gas utility company, a municipality, an individual or supplier operating an LP gas system in a housing project, apartment complex, condominium, mobile home park, shopping center or other systems.

Incident - an event that involves a release of gas from a pipeline facility that results in:

i. a death or personal injury necessitating in-patient hospitalization;
ii. estimated property damage of $50,000 or more; or
iii. an event that the operator deems significant.

LP gas – liquefied petroleum gas. A product in either a liquid or vapor form, depending upon the product pressure and temperature, composed primarily of propane, propylene, butane and butylene either by themselves or as a mixture.

Main – an LP gas distribution line that serves as a common source of supply for more than one service line.

Municipality - a city, county or any other political subdivision of a state.

Operating and maintenance plan - written procedures for operations and maintenance on LP gas systems.

Pipeline - all facilities through which gas moves in transportation. This includes pipes, valves and other items attached to the pipe, meter stations, regulator stations, delivery stations and fabricated assemblies.

psig - an abbreviation for pounds per square inch gauge pressure. See Chapter IX for more information on psig.

Pressure regulator - automatically reduces and controls the gas pressure in a pipeline downstream from a higher pressure source of LP gas.

Service line - a gas distribution line that transports gas from a common source of supply to a customer's meter or to the connection to a customer's piping if the piping is farther downstream or if there is no meter.

Service regulator - a device designed to reduce and limit the gas pressure provided to a customer.

Service riser - the section of a service line which extends out of the ground and is often near the wall of a building. This usually includes a shutoff valve and a service regulator.

Shutoff valve - a valve installed to allow the gas supply to a building to be shut off. The valve may be located upstream of the service regulator or belowground at the property line or where the service line connects to the main.

49 CFR - Title 49 of the Code of Federal Regulations (CFR). This document contains the actual safety regulations that must be complied with by the LP gas operator. Parts 190, 191 and 192 of 49 CFR contain the federal pipeline safety regulations relevant to operators of LP gas pipeline systems.

COMMONLY ABBREVIATED ORGANIZATIONS

AGA - American Gas Association.

ANSI - American National Standards Institute, formerly the United States of America Standards Institute (USASI). All current standards issued by USASI and ASA have been re-designated as American National Standards Institute and continue in effect.

API - American Petroleum Institute.

ASME - American Society of Mechanical Engineers.

ASTM - American Society for Testing and Materials.

DOT - U.S. Department of Transportation.

OPS - Office of Pipeline Safety. The pipeline safety division of the DOT's Research and Special Programs Administration.

MSS - Manufacturers Standardization Society of the Valve and Fittings Industry.

NACE - National Association of Corrosion Engineers.

NARUC - National Association of Regulatory Utility Commissioners.

NFPA - National Fire Protection Association.

NPGA – National Propane Gas Association.

RSPA - Research and Special Programs Administration. A major subdivision of the DOT, it is responsible for development and enforcement of the pipeline safety regulations. For addresses of RSPA regional offices, see the attached list of agencies and organizations.

CHAPTER I
REPORTS REQUIRED BY THE FEDERAL GOVERNMENT

The federal government requires every LP gas operator to telephone a report of any "incident" and, for some operators, to follow it up with a written report. The federal government may also require the LP gas operator to file a “safety related condition” report and an “annual report”. This chapter describes briefly each of these reports.

INCIDENT REPORTS

NOTE: Check with your state agency for any additional state reporting requirements. These can include lower dollar amounts of damage, media covering the incident, response by local emergency responders, road closure or evacuation.

It is required to telephone an incident report at the earliest possible moment, **but in any case within two hours:**

- of a release of LP gas from a system and:
- a death or personal injury requiring hospitalization or damage, including the cost of LP gas lost of $50,000.
- an event that is significant in the judgment of the operator, even though it was not described above.

This telephone report of an incident should include:

- identity of reporting operator;
- name and phone number of individual reporting the incident;
- location of the incident (city, county, state and street address);
- time of the incident (date and hour);
- number of fatalities and personal injuries, if any;
- type and extent of property damage;
- description of the incident.

The telephone incident report is made to the National Response Center at:

TOLL FREE (800) 424-8802
IN WASHINGTON, D.C. (202) 267-2675
24 HOURS EVERY DAY

REMEMBER, WHEN IN DOUBT MAKE THE CALL! See 49 CFR 191.5 for further information.

With the exception of master meter systems, operators of LP gas systems making a telephone report of an incident must follow it up with a written report.

Address for Incident Reports

All required incident reports must be submitted on Form RSPA F7100.1 to:

Information Resources Manager
Office of Pipeline Safety
Research and Special Programs Administration
USDOT, Room 7128
400 Seventh Street, SW
Washington, D.C. 20590

See 49 CFR 191.7 and 191.9 for further information.

SAFETY-RELATED CONDITION REPORTS

OPS may require operators of LP gas systems to report certain safety-related conditions.

A written report must be filed within five working days after the operator first determines that a safety-related condition exists, but not later than ten working days after the day the operator discovers the condition.

Each operator who is required to file a safety-related condition report is also required to update the operations and maintenance plan to include instructions enabling personnel who perform operation and maintenance activities to recognize conditions that may be safety-related conditions.

Typical conditions that would need to be reported by an LP gas operator include:

- unintended movement or abnormal loading of pipeline facilities by environmental causes such as earthquakes, landslides or floods, that impairs the serviceability of a pipeline;
- any malfunction or operating error that causes the pressure of a pipeline to rise above its maximum allowable operating pressure plus the pressure build-up allowed for operation of pressure limiting or control devices;
- a leak that constitutes an emergency and is not repaired within five days of determination;

Safety-related conditions that do not require a report include:

- condition on a customer-owned service line;
- a condition resulting in an incident, as defined in 49 CFR 191.3.;
- a condition on a pipeline more than 220 yards from any building or outdoor place of assembly, unless it is within the right-of-way of an active railroad, paved road or highway;

- a condition that is corrected before the report filing deadline, except for certain corrosion related conditions.

See 49 CFR 191.23(b) for further information.

Address for Safety-Related Condition Reports

All required written reports must be submitted to:

Information Resources Manager
Office of Pipeline Safety
Research and Special Programs Administration
USDOT, Room 7128
400 Seventh Street, SW
Washington, D.C. 20590

In addition, an LP gas system operator may be required to file a report with the state agency participating in the pipeline safety program. For further details on the filing requirements refer to 49 CFR 191.7. However, an operator must file a written report that contains all the information as specified in 49 CFR 191.25(b).

ANNUAL REPORTS

Operators of LP gas systems serving 100 or more customers from a single source must submit an annual report for that system. This report must be submitted on DOT Form RSPA F 7100.1-1. This report must be submitted each year, not later than March 15, for the preceding calendar year.

Address for Annual Reports

All required annual reports must be submitted to:

Information Resources Manager
Office of Pipeline Safety
Research and Special Programs Administration
USDOT, Room 7128
400 Seventh Street, SW
Washington, D.C. 20590

CHAPTER II
PLANS REQUIRED BY THE FEDERAL GOVERNMENT

All operators of LP gas systems are required to maintain plans for operations, maintenance and emergency response activities. Most operators comply with this requirement by developing and maintaining a manual that incorporates these plans. The manual must be prepared before operation of an LP gas system commences and must be reviewed and updated once a year. The manual must be available at locations where operations and maintenance activities are conducted. This manual fulfills the requirements of 49 CFR Part 192.605.

NOTE: The Federal DOT/OPS or the state agency certified under the Pipeline Safety Act may after due process require the LP gas operator to amend its plans and procedures as necessary to provide a reasonable level of safety.

OPERATIONS AND MAINTENANCE PLAN

An operations and maintenance plan is required of all LP gas operators by the pipeline safety regulations. The operations and maintenance plan must be written and followed to help the operator comply with the pipeline safety regulations. See 49 CFR 192.603 for further information.

OPERATIONS PLANS

Each operator shall include in its written plan, procedures for all operations which may be performed on the LP gas system by the operator or on behalf of the operator.

The following is a discussion of some of the operations procedures which may be encountered in a typical LP gas distribution system.

The operations topics covered here are:

- operating pressure
- pressure testing
- tapping and purging of the LP gas pipeline distribution facilities
- odorization
- testing for reinstating a service line
- abandonment or deactivation of pipeline or LP gas distribution facilities
- construction records, maps and operating history
- unaccounted for gas

Operating Pressure

Per the NFPA 58 (LP-Gas Code), first stage regulators shall have an outlet pressure up to 10.0 psig and incorporate an integral pressure relief valve, all in accordance with the Standard for LP-Gas Regulators, UL 144. These are typically factory set and non adjustable. This would limit the operating pressure of a typical newly installed system to a maximum of 10 psig.

In cases where the regulators in use are other than the 10 psig or less standard, further consideration must be given to setting an operating pressure, such as using an adjustable high pressure regulator with a 10 psig regulator between it and the second stage regulator(s). These situations might include a system put in service prior to the adoption of the 10 psig standard or where special order adjustable regulators are used.

The LP-Gas Code states that polyethylene piping systems shall be limited to vapor service not exceeding 30 psig. As discussed in Chapter III concerning materials, steel piping must be designed at either 125 psig, 250 psig or 350 psig.

These types of factors, based on material design and LP gas properties, can be used in conjunction with a pressure test conducted to verify the integrity of the piping system to arrive at an operating pressure. However, it is recommended operators of the small LP gas systems stay within the 10 psig standard for their distribution piping.

Operating pressure determination should be documented in the operator's written plan.

Pressure Testing

Pressure testing must be performed to verify the integrity of the piping system prior to placing it into service, when newly constructed or upon subsequent modification. The LP-Gas Code states that this pressure test can be done at not less than the normal operating pressure. Most operators test at a higher pressure than operating pressure. It is recommended that all operators follow this practice.

Pressure tests should be documented by the personnel performing the test and copies should be maintained for the life of the system.

Information documented should include:

- description of facilities
- date, time and location of test
- time on and off, duration of test
- initial and final pressure or recording chart if available
- test medium
- person conducting the test
- ambient conditions, temperature, weather

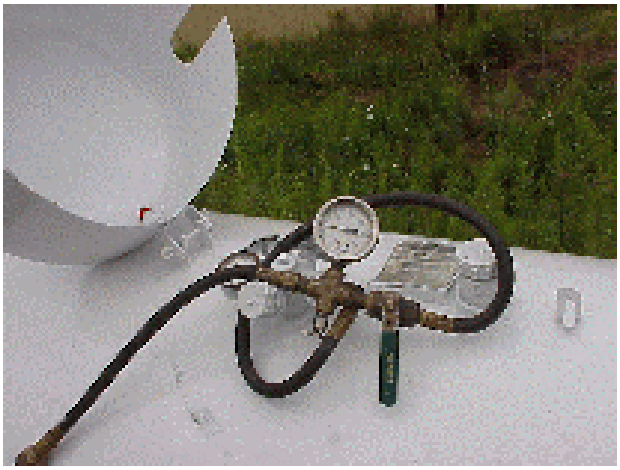

Tapping and Purging

Tapping and purging operations should be performed in accordance with written procedures by personnel with documented qualification in the use of those procedures (i.e. the LP gas distribution system operator should obtain and maintain copies of the qualifications of the individuals performing this operation). A good source of procedural information is the American Gas Association (AGA) Operating Section Report entitled Purging Principles and Practice. It is recommended that a purge medium, such as nitrogen, be used, if practical, or as a slug between air and gas. Water may also be used where the system will not be placed back in service. If air is used, care should be exercised to ensure that a flammable mixture of LP gas and air is not created. An instrument, such as a combustible gas indicator, should be used to verify gas purged in or out of the system. Points of introduction of purge medium and venting should be chosen to thoroughly purge the piping system.

Information documented should include:

- date and time of purge
- time on and off, duration of purge
- purge medium
- person conducting the purge
- ambient conditions
- further documentation discussed below in the case of facility abandonment

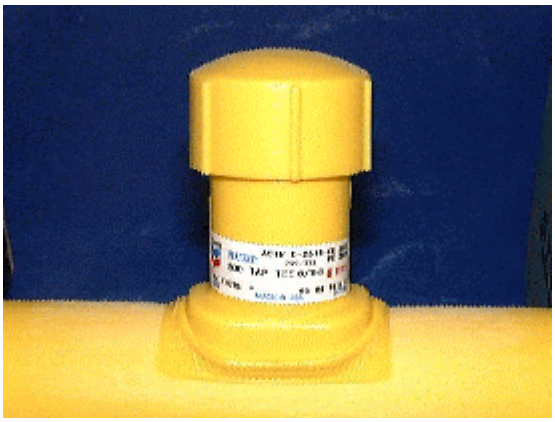

Odorization

The LP-Gas Code specifies that LP gas be odorized prior to delivery to the bulk plant. It goes on to require verification by "sniff-testing or other means, **and the results shall be documented**" when gas is delivered to the bulk plant or in the case where a delivery bypasses the bulk plant. If the documentation required by the LP-Gas Code is not available to the LP gas system operator, then the operator will need to do his own sniff tests to verify odorization and document the results.

Testing for Reinstating Service Lines

The written plan must contain a provision for testing (before placing in service) each service line that is disconnected from the main in the same manner as a new service line (49 CFR 192.725). Test procedure and documentation are discussed above.

Abandonment or Deactivation of Facilities

The written plan must include provisions for shutdown, abandonment or deactivation of facilities (49 CFR 192.727). When a gas main or service line is abandoned, it must be physically disconnected from the piping system and open ends effectively sealed. In addition, the operator must determine the necessity of purging the line. Note: Take into consideration the location and size of the main or service. As a recommendation, pipe two inches and larger should be purged.

In cases where the main and all the service lines connected to it are abandoned, the service line(s) must be capped at the customer's end. Also, the abandoned main must be sealed at both ends.

When service to a customer is temporarily or permanently discontinued, one of the following must be done:

- The valve must be closed to prevent the flow of gas to the customer. This valve must be secured with a lock or some other device to prevent opening of the valve by unauthorized people. There are numerous locking devices designed for this purpose.
- A mechanical device or fitting that will prevent the flow of gas must be installed in the service line or in the meter assembly.
- The customer's piping must be physically disconnected from the gas supply and the open ends sealed. (49 CFR 192.727).

Construction Records, Maps and Operating History

Construction records should include detailed construction plans, modified as appropriate to show the as-built condition of the facilities. These plans and maps should show in detail, the location of all facilities and date of installation. Maps should have enough detail to accurately determine the physical location of all facilities.

A detailed bill of materials should be included. This should provide specifications of the materials used, including manufacturer, size (diameter, wall thickness, etc.), pressure rating, manufacturing standard, etc.

Additional construction records may include:

- joining procedure qualifications
- pipe joiner and other personnel qualification records
- inspection records for visual, destructive and non-destructive testing
- pressure test
- date of cathodic protection application for steel

All system modifications should be recorded in detail.

Operating history should include records of all system modifications and repairs, areas of active corrosion, history of areas susceptible to damage and operating pressure records.

Unaccounted For Gas

LP gas systems serving 100 or more customers from a single source are required to file an annual report. Part of this report must be the system's percentage of unaccounted for gas. Unaccounted for gas is the difference between the amount of propane delivered into the system and the amount that is recorded through the customers' meters. Unaccounted for gas can be caused by measurement and control errors, system leakage and theft.

Temperature and pressure affect gas density. For this reason, temperature-compensating meters are widely used. For customers with high gas usage, the meter can be located upstream of the second stage pressure regulator so that a smaller (less costly) meter can be used. Where the meter is located upstream of the second stage pressure regulator, a constant pressure must be maintained. Otherwise meter readings will not be accurate and can lead to an amount of unaccounted for gas. Pressure-compensating meters are available.

The better the control on gas measurement, the easier it is to spot problems in other areas that affect unaccounted for gas.

MAINTENANCE PLANS

During the required periodic maintenance checks that are required by the Federal Pipeline Safety Regulations, operators should observe the system to ensure that there are no violations of NFPA 58.

Some of the areas to check are:

- Loose combustible materials are not stacked within ten feet of the LP gas tank.

- If a security fence is required, it is in adequate repair. All necessary gates are accessible in case of an emergency. Gates are locked when operator personnel are not present.

- Important buildings have not been added closer to the tank(s) than permitted in NFPA 58.

- Signs that are required on some installations are being maintained.

Maintenance plans must contain the following components:

<u>Pressure Limiting Devices</u>

It is important that all systems operate within their intended acceptable pressure limits. Devices must be maintained annually to ensure that they are:

- in good mechanical condition
- capacity is adequate
- set to function at correct pressure
- properly installed and protected from vehicular traffic, dirt, liquids, icing and other conditions that might prevent proper operation

Lock up testing and/or the use of pressure recording devices are ways to prove regulator stability. First stage regulators are now required to have built-in pressure relief devices per NFPA 58, unless the capacity of the regulator is more than 500,000 Btu/hr. In this case a separate pressure relief valve may be used.

Some LP gas systems use vaporizers in their systems. Hydrostatic relief valves and vaporizer relief valves are normally part of a system that uses vaporizers. The O&M plan should include the methods in which all pressure limiting devices are maintained.

Patrolling

Although this is normally not necessary for small LP gas systems, if a condition exists in the area of an LP gas system where anticipated movement of the pipeline could cause failure or leakage (e.g., weight from construction, area prone to wash out, etc.), then the pipeline shall be periodically patrolled until the condition no longer exists. The frequency of the patrolling must be determined by the severity of the conditions which could cause failure or leakage and consequent hazards to safety, but no fewer than four times each calendar year in the business district or twice each calendar year outside of the business district.

Example of a washout area found by patrol.

Key Valves

Key valves, or critical valves, are the valves needed to shut down the LP system, or part of the LP system, in the event of an emergency. For many LP gas systems, this would be the container main valve. Key valves should be checked at least once per year to ensure that they are operable. Procedures for maintaining these valves must be included in the maintenance section of the O&M Manual.

Accidental Ignition of Gas

The plan must include provisions to prevent the accidental ignition of gas. LP gas alone is not explosive but when mixed with air in a concentration of 2.15% to 9.6% for propane, it can ignite or explode. Every precaution should be taken to prevent unintentional ignition of LP gas. When venting gas to the air a fire extinguisher must be available and positioned for immediate use.

Leak Survey

A survey of an LP gas distribution system must be made as frequently as necessary, but at intervals not exceeding **five years**. If part or all of the system is located in a business district, a gas leakage survey must be conducted at least **once every year.** Procedures on how to conduct leak surveys must be included in the maintenance section of the O&M manual.

Some LP gas operators use contractors to leak survey their systems. It is the responsibility of the operator to ensure that the survey is conducted in accordance with the pipeline safety regulations. The operator must retain a report describing the results of each survey.

LP gas operators must do a subsurface type of survey when using gas detection equipment to perform their survey. Although an FI (Flame Ionization) unit may be used to assist in the survey, a CGI (Combustible Gas Indicator), must be used for pinpointing leaks and classifying them.

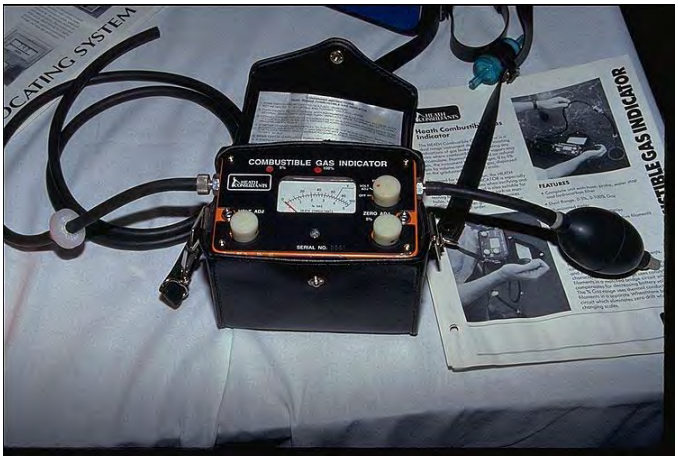

Many LP gas operators opt to do a pressure drop test to prove the integrity of their pipeline. This is normally done on smaller systems, where shutting off the customers is not a problem. **A very important thing to consider is, if you do have any drop in pressure, then you must do a subsurface survey using a CGI meter.** A pressure drop test tells you if you have a leak. It does not tell you the location of the leak or its classification.

Other things to consider when doing a pressure drop test are:

- Pressure used during the test should be at least equal to the operating pressure.
- Time duration of the test should consider the volume of the pipeline being tested; the time for the test medium to become temperature stabilized and the sensitivity of the instrument being used.

An advantage of doing this type of test is that the first stage regulator can be tested for lock up at the same time. Some operators use a portable supply tank on certain systems, and temporarily connect it into a tee just before the second stage regulator. With the proper valving installed ahead of time, they can perform a leak test of the piping and lock up on the regulator without shutting down the system.

For more information on performing leak surveys see Chapter X. This chapter includes useful information from **AGA** and the **Gas Pipeline Technology Committee.**

Corrosion Testing

Underground steel mains, including underground tanks must be tested annually to prove that the systems are being cathodically protected. Although there are five acceptable methods of testing, the most common method being used for small systems is the negative 0.85 dc volt criteria. Aboveground piping and tanks must be inspected for atmospheric corrosion at no longer than three year intervals, although for many LP gas systems it is easy and good practice to observe the condition of the aboveground piping during other annual maintenance. For more information on corrosion and compliance refer to 49 CFR Part 192 Subpart I and CHAPTER VIII of this manual.

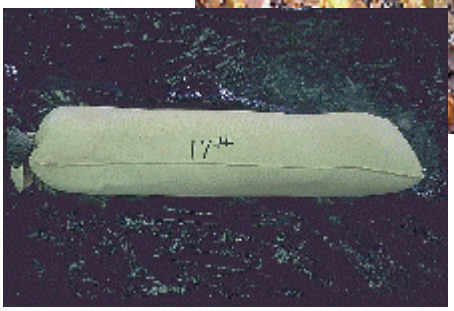

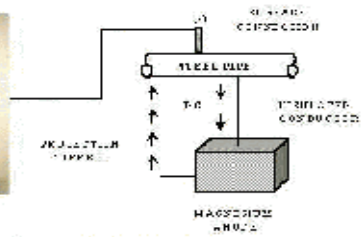

EMERGENCY PLANS

Each operator is required to maintain a written plan of procedures and other necessary information to meet LP gas emergency situations. The federal regulations for emergency plans are contained in 49 CFR Part 192.615 of the federal Pipeline Safety Regulations. It is also the responsibility of the LP gas operator to be familiar with all state and local regulations as they apply to emergency situations regarding their piping systems.

The written emergency plan should contain the following information:

1. Emergency notification list.
2. Map of key valve locations.
3. Description and location of emergency equipment.
4. Plan for responding to gas leak reports and interruption of service.
5. Checklist for a major emergency.
6. Reporting requirements; both telephonic and written reports.
7. Plan for restoration of service after an outage.
8. Accident investigation procedures.
9. Education and training plan.

1. EMERGENCY NOTIFICATION LIST – The telephone numbers of the LP gas system operator, local fire department, emergency ambulance service, local law enforcement agencies, LP gas distributor, state and local regulatory agencies and any other entity whose service may be necessary in an emergency must be readily accessible to all operator personnel who may be involved in emergency situations. For master meter operators, a copy of this list should be posted in a public area and the tenants should be made aware of its location. This notification list must be kept current.

   All operating personnel and customers should be familiar with local 911 calling procedures.

2. MAP OF KEY VALVE LOCATIONS – A map of the LP gas system indicating the location of key valves and master meters must be included in the emergency plan. An easily recognizable legend should be used on the map for quick identification of the key valves and master meters.

3. DESCRIPTION AND LOCATION OF EMERGENCY EQUIPMENT – Emergency equipment must be available. A description of the equipment and its location must be specified in the emergency plan. The list should include any equipment that would be available from the LP gas distributor and contractors. Agreements with the local distributor and contractors on the use of their equipment should be in place before the emergency occurs.

4. PLAN FOR RESPONDING TO GAS LEAK REPORTS AND INTERRUPTION OF SERVICE – The operator must have written procedures to be followed in response to gas leaks reported by customers. It is the responsibility of the LP gas operator to ensure that

all employees are familiar with the procedures for responding to gas leak calls and reports.

- The employee receiving a report of a gas leak must get as much information as possible to assist in completing a leak report. A typical leak report is included in Appendix B, Form 10. Use common sense; saving human life is the first priority followed by preserving property.

- All reports of leaks on customer premises get priority. LEAKS INSIDE A BUILDING GET TOP PRIORITY.

- Upon determining that a hazardous leak exists inside a building, remind the person initiating the leak call of the following:

    - Do not turn on or off any electrical switches.
    - Do not ring doorbells or use the telephone. If the call is being made from the telephone within the building, inform the person not to hang up the telephone receiver.
    - Do not light matches or cigarettes.
    - Do not use the garage door opener or start any automobile engines within or near the building.
    - If possible, extinguish all open flames. Note: Evacuation time is important.

    - Evacuate the building to a safe distance (about a city block). Walk away – do not use a vehicle.
    - If possible, turn off the gas supply. Remember: Evacuation time is important.

- Dispatch necessary personnel to the location of the reported leak. This could include local emergency responders such as fire and police personnel.

- It is the responsibility of the first company employee on the scene to take whatever corrective action is necessary to protect life and property (in that order). As required, the person in charge must:

    - Set up communications.
    - Coordinate the on-scene emergency response operation.
    - Make decisions concerning operation of emergency valves, isolating the area and use of emergency equipment.
    - Implement the emergency checklist.

  It is important for all responders to know their limitations. They should not take undue risks that may endanger their personal safety.

- Operator responses for leaks near buildings include as a minimum:

    - Assess danger to building occupants, to the public and to property.
    - Extinguish all open flames.
    - If necessary, notify fire, police and LP-gas personnel who are prepared to respond to emergencies.
    - Cordon off the area and initiate traffic control. Note: This may be a police responsibility.
    - Notify the supervisor or other responsible personnel.
    - Bar hole next to the foundation of the building and perform an instrument leak survey.
    - Check neighboring buildings for the presence of gas.
    - Implement the checklist for emergency situations.
    - Repair the leak.
    - Return occupants to the building only when positively certain that the area is safe.

- Operator responses for leaks inside a building include as a minimum:

    - Make an immediate evaluation to determine the concentration of gas and the source of the leak.
    - Evacuate the building if necessary.
    - Do not use any electrical devices including the telephone.

- Shut off the gas at the meter or at another valve (curb valve or a key valve).
- Bar hole around the foundation and perform an instrumented leak survey. Check near water meters, other openings and in depressions.
- If house and surrounding area are gas free, turn on gas valve. Check all gas piping and appliances for leaks. Check for meter movement – is it moving normally or at a faster rate?
- Conduct a soap bubble test with an approved solution.
- Repair any leaks.
- If leak cannot be repaired at the time, notify the customer. Turn off and lock the meter. Tag the meter.

- Operator responses for gas burning inside a building include as a minimum:

  - Call the fire department.
  - Master meter operators should also call the LP-gas distributor.
  - If the fire is at an appliance, shut off the gas to the appliance. If possible, this should be done at the appliance valve.
  - If it is not possible to shut off the appliance valve, it may be necessary to shut off the service valve on the riser, a curb valve or a key valve.
  - Implement the checklist for emergency situation

5. <u>CHECKLIST FOR A MAJOR EMERGENCY</u> – Every item may not be necessary.

_____ 1. Has the fire department been called?
_____ 2. Have persons been evacuated and the area cordoned off?
_____ 3. Has police department been notified?
_____ 4. Has repair crew been notified?
_____ 5. Has company call list been implemented?
_____ 6. Has communication been established?
_____ 7. Has outside assistance been requested?
_____ 8. Have ambulances been requested?
_____ 9. Have emergency valves to shut down or reroute the gas been identified and located?
_____ 10. Has leak been shut off or brought under control?
_____ 11. Has civil defense or local emergency response crew been notified?
_____ 12. Has the radio and/or television station been given emergency broadcast instructions?
_____ 13. If an area has been shut off, have the individual services in the area been shut off?
_____ 14. Is the situation under control and has the possibility of recurrence been eliminated?
_____ 15. Has the surrounding area, including adjacent buildings been probed for the possibility of further leakage?
_____ 16. Have tags been placed on the necessary meters?

_____ 17. Have telephonic reports been made to the state or local regulatory agencies?

_____ 18. Has a telephonic report been made to the federal Office of Pipeline Safety National Response Center?

Date _____

6. REPORTING REQUIREMENTS; BOTH TELEPHONIC AND WRITTEN REPORTS - In the case of an incident, a telephonic report must be made within two hours to the National Response Center (1-800-424-8802). In Washington, DC, the telephonic report is made to 267-2675.

An incident is an event involving the release of gas from a pipeline system and:

1. A death or an injury requiring in-patient hospitalization, or
2. Estimated property damage of $50,000 or more.

A written report must be submitted on USDOT Form RSPA F7100.1 as soon as practicable, but not more than 30 days after detection of an incident. Master meter systems must make the telephonic report but are exempted from the written report.

The address for written incident reports to the federal government is:

Information Resources Manager
Office of Pipeline Safety
Research and Special Programs Administration
USDOT, Room 7128
400 Seventh Street, SW
Washington, DC 20590

NOTE: LP gas operators should check with state regulatory agencies for additional reporting requirements.

7. PLAN FOR RESTORATION OF SERVICE AFTER AN OUTAGE – Qualified persons must follow proper written procedures to safely restore service after an outage. The procedures must include details for re-lighting appliances.

Gas service must be restored on a building-by-building basis throughout the affected area. First, service to each customer must be shut off, either at the meter or at a curb valve. If this cannot be done, the gas flow can be shut off by squeezing off the line.

Before restoring service to an affected area, all gas piping and meters must be purged of air. Then re-lights can be accomplished. Never turn on the gas at the meter unless access is available to all appliances on the customer piping. If the operator cannot get access to a customer's building facilities, notification must be left in a conspicuous location requesting the customer to call the LP gas operator to schedule the restoration of service.

Ahlgas Propane Service

CGI
Couldn't **G**et **I**n

Your gas service was interrupted due to:

1. out of gas
2. other

We could not get in to safety check your gas appliances so we have left the gas turned off.

Please call 234-9804 so that we can make arrangements to turn your gas back on.

The person in charge of the restoration of service must accept the entire responsibility for following the written procedures.

A written record of the incident with all necessary information, including the information on restoration of service, must be kept in a permanent file.

8. ACCIDENT INVESTIGATION PROCEDURES – Each operator must establish written procedures for analyzing accidents and failures to determine the cause of the failure and minimize the possibility of recurrence. The procedures must include:

- Evaluation of the situation.
- Secure the area to protect evidence.
- Review of applicable operating and maintenance plans.
- Review of equipment specifications.
- Review of emergency procedures.
- Conduct leak survey, pressure tests of piping and equipment, meter tests and regulator checks.

- Interviewing of persons at the scene.
- Examination of burn and debris patterns.
- Checking odorization levels.
- Review of meter and gauge readings.
- Notation of weather conditions.
- Selection of samples of failed facility or equipment for laboratory analyses to determine the causes of the failures.

9. EDUCATION AND TRAINING PLAN – Operating personnel and other emergency responders must be qualified to ensure understanding of emergency procedures and equipment. It is the responsibility of the operator to conduct adequate training and to keep records of the training. Training should include:

- Updating of the written emergency plans.
- Review of personal responsibilities in emergency situations.
- Review of location and use of emergency equipment.
- Properties of LP gas.
- Review the locations and use of system maps and records, maintenance records, valve records and operating procedures.
- Review of typical emergency situations to reinforce the step-by-step actions to be followed in emergencies. This includes methods of contacting public officials, firefighters, police and LP gas distributors.
- Review of record keeping requirements.
- Review the procedures for making telephonic and written reports.

PUBLIC EDUCATION PLAN

The operator also has a responsibility to conduct a continuing education program that enables customers, the public and excavators to recognize and respond to emergency situations. The education program can include:

- Information about the properties of LP gas.
- Recognition of the odorants used in LP gas.
- Actions to take when a strong gas odor is present.
- Applicable one-call procedures prior to excavation.
- 24-hour telephone numbers for reporting gas leaks.

Scratch and Sniff

Ahlgas Propane Company

Propane is an odorless gas, so an odor has been added to warn you if there is a leak.

Please scratch in the circle below and smell that area to familiarize yourself with the odor.

Whenever you smell that odor please call us at 234-9804.

This educational information may be conveyed to the interested parties by a number of means, including:

- Radio and television.
- Newspapers and newsletters.
- Public meetings and one-on-one encounters.
- Bill stuffers, mailings and handouts.
- Billboards and bulletin boards.

If a significant percentage of the population in the operator's area does not speak English, the education and training must be conducted in a language understood by the non-English speaking community.

The operator must maintain records of the public education program.

Many excellent educational pamphlets and other training aids are available from the National Propane Gas Association. Their address is:

National Propane Gas Association
1600 Eisenhower Lane, Suite 100
Lisle, IL 60532

CHAPTER III
MATERIALS AND EQUIPMENT QUALIFIED FOR USE IN PROPANE GAS SYSTEMS

INTRODUCTION

The pipeline safety regulations refer to NFPA 58 for materials and equipment used in propane gas systems. Where the subject is not covered in NFPA 58, 49 CFR Part 192 is used. **In the event of a conflict between 49 CFR Part 192 and NFPA 58, NFPA 58 shall prevail**.

It is important for an operator to know the piping materials and propane storage tank sizes for all systems. The operator should develop, or have the system installer or consultant develop, a list of qualified materials for construction and repair of the system. This can be accomplished by referring to NFPA 58 and referencing equipment manufacturers' installation manuals.

When purchasing materials for use in a propane pipeline system, it is important to be sure that all materials conform with NFPA 58, and are recommended by the manufacturer for propane service. Of course, a propane pipeline system consists of storage tanks, valves, pressure regulators, pipe, fittings and meters.

TANKS

NFPA 58 permits only pressure vessels built in accordance with:

- The ASME Boiler and Pressure Vessel Code, "Rules for the Construction of Unfired Pressure Vessels," Section VIII, or
- The Regulations of the U.S. Department of Transportation (DOT) to be used in propane gas systems.

NFPA 58 does not contain the specific requirements for these pressure vessels.

ASME containers shall be marked in accordance with the following, per NFPA 58:

(a) The marking specified shall be on a stainless steel metal nameplate attached to the container, located to remain visible after the container is installed. The nameplate shall be attached in such a way as to minimize corrosion of the nameplate or its fastening means and not contribute to corrosion of the container. Exception: Where the container is buried, mounded, insulated or otherwise covered so the nameplate is obscured the information contained on the nameplate shall be duplicated and installed on adjacent piping or on a structure in a clearly visible location.

(b) Service for which the container is designed (for example, underground, aboveground or both)

(c) Name and address of container supplier or trade name of container

(d) Water capacity of container in pounds or U.S. gallons

(e) Design pressure in pounds per square inch

(f) The wording "This container shall not contain a product that has a vapor pressure in excess of psig at 100°F" (See NFPA 58, Table 2-2.2.2.)
(g) Outside surface area in square feet
(h) Year of manufacture
(i) Shell thickness and head thickness
(j) OL, OD, HD
(k) Manufacturer's serial number
(l) ASME Code symbol

NOTE: If the nameplate is not attached, the tank does not meet the ASME Code and cannot be used.

ASME tanks do not have to be retested or inspected after they are placed into service. Prior to the installation of a previously used container, it may be prudent to have the container inspected to assure that there is no corrosion or damage that could impair the integrity of the container. Welding repairs to ASME tanks can be made only by repair personnel who have been certified under the ASME Code and have been issued an "R" stamp. Repairs must be stamped with the "R" stamp and the work documented.

DOT cylinders are designed for transportation, so their weight is an important consideration. They use thinner walls than ASME tanks and must be periodically recertified and so marked. All DOT cylinders have one or more dates stamped on the cylinder, usually on the collar that protects the cylinder valve from damage. Cylinders cannot be filled if the date on the cylinder has passed. A filled cylinder can be used at any time after the date has expired.

The largest DOT cylinder for propane service has a water capacity of 1,000 pounds, about 420 pounds of propane. Cylinders are usually found only in smaller systems.

PIPE

NFPA 58 provides a list of pipe and tubing materials and fittings that can be used in propane systems. Be sure to check the latest edition of NFPA 58 referenced in 49 CFR Part 192 for any materials that may have been added or deleted.

Pipe meeting the following specifications can be used:

Wrought-iron pipe ANSI B36.10M, Welded and Seamless Wrought Steel Pipe.

Steel pipe	ASTM A53, Specification for Pipe, Steel, Black and Hot-Dipped, Zinc-Coated Welded and Seamless.
Steel pipe	ASTM A106, Specification for Seamless Carbon Steel Pipe for High-Temperature Service.
Brass pipe	ASTM B43, Specification for Seamless Red Brass Pipe, Standard Sizes.
Copper pipe	ASTM B42, Specification for Seamless Copper Pipe, Standard Sizes.
Polyethylene pipe	ASTM D2513, Specification for Thermoplastic Gas Pressure Pipe, Tubing and Fittings.

Note that pipe must be recommended by the manufacturer for use with LP gas. Polyethylene pipe must be marked in compliance with the product marking requirements of ASTM D2513, and must include:

- The manufacturer's name or trademark,
- The Standard Dimensional Ratio (SDR) of the pipe,
- The size of the pipe,
- The designation polyethylene (PE), the date manufactured and the designation ASTM D2513.

TUBING

Tubing meeting the following specifications can be used:

Steel tubing	ASTM A539, Specification for Electric-Resistance-Welded Coiled Steel Tubing for Gas Fuel Oil Lines.
Brass tubing	ASTM B135, Specification for Seamless Brass Tube.
Copper tubing	ASTM B88, Type K or L, Specification for Seamless Copper Water Tube.
	ASTM B280, Specification for Seamless Copper Tube for Air Conditioning and Refrigeration Field Service.
Polyethylene tubing	ASTM D2513, Specification for Thermoplastic Gas Pressure Pipe, Tubing and Fittings.

FITTINGS

Fittings used with Metallic Pipe - Fittings in metallic pipe and tubing must be steel, brass, copper, malleable iron, ductile (nodular) iron or plastic. No cast iron can be used. Pipe joints in wrought iron, steel, brass or copper pipe can only be flanged, threaded, welded or brazed. Brazed fittings must be made using a brazing filler material and must have a melting point exceeding 1,000º F. (All commercially available brazes meet this requirement.) This eliminates solder as a tubing joining material. When a flange is opened, the gasket must be replaced.

Joining Polyethylene Pipe and Tubing - Joints in polyethylene pipe and tubing must be made using the following procedures:

a. Heat fusion.

ASTM D2683, Specification for Socket-type Polyethylene (PE) Fittings for Outside Diameter Controlled Polyethylene Pipe; or
ASTM D3261, Specification for Butt Heat Fusion Polyethylene (PE) Plastic Pipe and Tubing; or
ASTM F1055, Specification for Electrofusion Type Polyethylene Fittings for Outside Diameter Controlled Polyethylene Pipe and Tubing,

b. Compression-type mechanical fittings up to 2 inches.

Must comply with Category 1 of ASTM D2513 for mechanical joints and be tested and shown to be acceptable for use with polyethylene pipe and polyethylene tubing and meeting additional requirements in NFPA 58.

c. Factory-assembled transition fittings.

All fittings used to join polyethylene pipe or polyethylene tubing shall be tested and recommended by the manufacturer for use with polyethylene (PE) pipe and shall be installed according to the manufacturer's written procedure.

d. Anodeless risers.

Factory-assembled anodeless risers must be recommended for LP-Gas by the manufacturer. Field-assembled anodeless risers are design certified to meet the requirements of Category 1 of ASTM D2513 and the requirements of NFPA 58.

Anodeless risers are used to make the transition between underground PE pipe or tubing and metal pipe aboveground. As PE must be installed below ground, risers are commonly used to connect the underground PE to aboveground piping materials. Anodeless risers are available as factory assembled units and field assembled kits. Anodeless risers are made from PE pipe inside a protective metal sheath, usually schedule 40 steel pipe. The metal is protected from corrosion by a factory applied coating, and a separate anode is not required, hence the name, "anodeless". Factory assembled risers usually have a 90 degree bend at the PE connection end and come in several lengths depending on the depth of burial of the PE pipe or tubing.

Polyethylene pipe cannot be joined by a threaded or miter joint.

Installation - All PE fittings must be installed in accordance with the fitting manufactures' instructions by persons trained in the applicable joining procedure. The training must be documented.

Fittings for polyethylene pipe and tubing must be fabricated from materials listed in ASTM D2513, Specification for Thermoplastic Gas Pressure Pipe, Tubing and Fittings and must be recommended for LP gas use by the manufacturer.

Operating Pressure	Fitting design pressure
Higher than container pressure	350 psig, min
Liquid propane or vapor over 125 psig	250 psig
Propane vapor less than 125 psig	125 psig

VALVES

All valves used in metallic piping systems must have pressure containing parts of steel, ductile (nodular) iron, malleable iron or brass. All materials used, including valve seat discs, packing, seals and diaphragms, must be resistant to the action of LP gas under service conditions. Many valves are listed by independent testing laboratories for use in LP gas service. These can be used as recommended by the manufacturer. Other valves can be used, but must comply with the requirements of NFPA 58 and should be recommended by the manufacturer for LP gas service to be sure that all the component parts of the valve are approved for LP gas service.

Valves used with polyethylene pipe and tubing must meet the requirements of ASTM D2513 and be so marked.

OVERPRESSURE PROTECTION EQUIPMENT

The requirements for two-stage pressure regulators in NFPA 58 incorporate overpressure protection. No additional equipment for overpressure protection is needed when residential systems complying with NFPA 58 are installed. Overpressure protection is accomplished by reference to the requirements of UL 144, Pressure Regulating Valve for LP-Gas, which requires integral pressure relief to limit the outlet pressure of the second stage regulator to 2 psig or less in the event of failure of either the first or second stage pressure regulator under failure conditions.

All first stage propane pressure regulators up to a capacity of 500,000 BTU/hr are designed to deliver a maximum of 10 psig to the second stage regulators. This type of regulator incorporates a pressure relief valve which is operated by over-travel of the diaphragm stem. This pressure relief feature actuates when the diaphragm has traveled as far as it can in an effort to maintain the desired 10 psig outlet pressure. Integral pressure relief is required on all first stage regulators of this size. Regulators larger than 500,000 BTU/hr either incorporate integral overpressure protection or can use a separate external pressure relief valve. When specifying regulators larger than 500,000 BTU/hr it is important to specify an integral or separate overpressure protection device. The overpressure protection device can be a pressure relief valve, a second regulator in series (monitor regulator) or an automatic shutdown device. Regulators incorporating an integral pressure regulator are available up to 2,500,000 BTU/hr. Larger regulators use separate pressure relief valves which must be sized to insure that the rated inlet pressure of the second stage regulator is not exceeded. Regulator manufacturers can provide assistance in sizing larger systems.

The second stage pressure regulator, located near each gas user in the system, is designed to reduce the 10 psig propane pressure to 11 inches of water column. This regulator incorporates a full capacity relief valve similar in design to the relief valve in the first stage which will limit the downstream pressure to less than 2 psig in the event of an emergency situation.

The limit of 2 psig was selected to correspond to requirements for appliance pressure controls. The standards for appliance pressure controls have been revised to test for overpressure of up to 2 psig with no leakage out of the appliance control. The control is not required to properly operate following an overpressure of 2 psig, but must not leak gas into the building.

It must be remembered that this means of accomplishing overpressure protection operates by releasing propane to the atmosphere instead of inside a building in the event of a failure. Operators of small propane systems may elect to advise their customers of the need to report any releases of propane which will be identified by an obvious hissing noise coming from either regulator.

NFPA 58 and UL 144 were revised in the 1995 edition to incorporate this overprotection system. The final date to produce regulators under the previous edition of UL 144 was June 1, 1998. Most manufacturers have revised their regulators to meet the new requirements in 1995. If in doubt, specify that all regulators meet the latest edition of UL 144.

CHAPTER IV
CONSTRUCTION AND REPAIR

This chapter is designed to help the LP gas operator meet the construction and repair requirements set by the pipeline safety regulations. It outlines construction, pipe handling and pressure testing requirements for installation of a safe system. It explains the procedures to qualify a person to make a pipe joint. It gives directions for finding "qualified persons" to do construction and repair work on a gas system. Remember, it is always the operator's responsibility to see that a contractor follows all requirements.

Manufacturers of pipe, valves, fittings and other gas system components must design and test them to mandatory industry specifications. The specifications are incorporated in NFPA 58 by reference into 49 CFR Part 192, the gas pipeline safety regulations. Components meeting the requirements are qualified for gas service and are marked with the "approved" markings (See Chapter III). In addition, manufacturers usually develop procedures for joining their products and joining other materials to their products. Manufacturers' product manuals provide procedures for installation and operation that should be incorporated in the operator's operations and maintenance plans.

PLANNING AHEAD

It is essential that an LP gas operator knows the types of material and various elements of the gas piping system. A piping system consists of pipe, tanks, valves, fittings, regulators, relief devices and meters. The operator must select components for the system that meet all applicable standards and that comply with the pipeline safety regulations. For example, to develop a cathodic protection program, it is necessary to know the type of metal piping in the system.

Records of the types and locations of system components are critical for planning purposes. Operators who are uncertain of the type of material in their gas piping system must identify the materials. This may be done in one of the following ways:

- Contact previous owners of the system.
- Contact the contractor who installed and/or maintained the system.
- Check state, city or county permits.
- Carefully expose the pipe in certain locations to determine the type of materials and components.

Operators unfamiliar with the types of materials must rely on a qualified person to identify the components. These investigations may require the operator to engage a consultant if adequate in-house expertise is lacking.

PIPE INSTALLATION, REPAIR AND REPLACEMENT: GENERAL COMMENTS

Gas lines must be installed with at least 18 inches of cover. This can be reduced to 12 inches where damage to the pipe is not likely. If the minimum buried depth cannot be met, the pipe must be installed in conduit or bridged (shielded).

Installation of gas pipes must be conducted by qualified personnel. Local gas utilities and local gas associations may be able to recommend qualified persons/contractors who have the necessary background for gas pipe installation. However, contractor work must be supervised carefully. The following sections list the minimum requirements for joining and construction activities.

METALLIC PIPE INSTALLATION

All the conditions listed below must be met when installing metallic pipe:

- Make each joint in accordance with written procedures that have been proven by test or experience to produce strong, gas tight joints.
- Obtain and follow the manufacturer's recommendations for each specific fitting used. See Figure IV-1 for examples of manufacturer's instructions for a mechanical coupling. Include the manufacturer's procedures in the operations and maintenance plans.
- Handling pipe properly without damaging the outside coating is imperative. If the coating is damaged, accelerated corrosion can occur in that area.
- Coat or wrap steel pipe at all welded and mechanical joints before backfilling as well as all areas of damaged coating.
- Test new pipe for leaks before backfilling.
- Support the pipe along its length with proper backfill. Make certain that backfill material does not contain any large or sharp rocks, broken glass or other objects which could scrape the coating or dent the pipe.
- Cathodically protect steel pipes.
- Electrically insulate dissimilar metals. (See Chapter VIII for illustrations.)

If welding steel is necessary in a pipeline, review NFPA 58 which requires that welding must be performed in accordance with ASME Section IX of the Boiler and Pressure Vessel Code. Welders must be qualified in accordance with ASME IX. Some states have special welding certification programs.

Welding of steel pipe is difficult. Both the procedures and the personnel must be qualified for the type of weld performed. If welding is done on a gas system, qualified welders can be referred by:

- the local gas utility;
- local gas associations;
- consultants.

PLASTIC PIPE INSTALLATION

Plastic pipe is commonly used for distribution mains and services by the gas industry. Polyethylene pipe is the only plastic pipe that can be used for LP gas piping. PE plastic pipe must be manufactured according to standard ASTM D2513 and marked with that number.

Plastic pipe is not permitted for aboveground installation. Plastic pipe must be buried or inserted. The operator must include written joining procedures in the operations and maintenance plan. Each joint must be made in accordance with written procedures that have been proven by test or experience to produce strong gas tight joints. Plastic pipe joining procedures can be obtained from qualified manufacturers. Do not purchase a product if it is not certified by the manufacturer or supplier for qualified joining procedures.

If a contractor installs PE plastic pipe, the operator is still responsible to ensure that only PE pipe manufactured according to ASTM D2513 is installed. In addition, the operator must verify that the contractor follows written joining procedures which meet the manufacturers' recommended joining procedures for each type of pipe and fitting used.

According to the pipeline safety regulations, a person making and inspecting joints must be qualified. No person may make a plastic pipe joint unless that person has been qualified under the applicable joining procedure by making a specimen joint from pipe sections joined according to the procedure that passes inspection and test.

The specimen joint must be visually examined during and after joining and found to have the same appearance as a joint or photograph of a joint that is acceptable under the procedure. In the case of heat fusion, the specimen must be cut into at least three longitudinal straps, each of which is:

- Visually examined and found not to contain voids or discontinuities on the cut surfaces of the joint area;
- Deformed by bending, torque or impact and if failure occurs, it must not initiate in the joint area.

A person must be re-qualified under an applicable procedure, if during any 12-month period that person:

- Does not make any joints under the procedure;
- Has 3 joints or 3 percent of the joints made, whichever is greater, that are found unacceptable by testing.

Figure IV-1

Easy-to-install Permasert system

In addition to saving time and money, using a Perfection Gas Distribution System instills the confidence of knowing you will repeatedly achieve a safe gas-tight connection. Our easy five-step installation procedure assures you of consistent positive connections that prevent pull-out of the pipe or tubing.

Cut the PE piping so that the end is square.

Wipe with a clean dry cloth. Inspect the last several inches of PE piping for damage. If any, cut again to remove damaged area.

Use the Perfection chamfering tool for a proper O.D. chamfer. This chamfer permits the PE piping to be completely stabbed without affecting the internal seals.

Use a soft felt tip pen, crayon or grease pencil to mark the stab depth as indicated on your Permasert package instructions. The stab depth is the approximate distance from the edge of the fusion bead to the end of the fitting body.

Stab the PE piping into the Permasert fitting so that the stab depth mark is visible:

- Within 1/8" of moisture seal on 1/2" CTS and 1" CTS sizes
- Within 1/4" on all other sizes through 1-1/4" CTS
- Approximately 3/8" on 1-1/4" IPS and 2" IPS sizes

The PE piping must bottom out in the fitting. Pressure test the joint in accordance with your standard procedures. The reference mark can move outward up to an additional 3/8" during pressure testing.

Perfection Corporation
A Subsidiary of American Meter Company
222 Lake St. • Madison, Ohio 44057-3189 USA
Phone: 216-428-1171 • Fax: 216-428-7325
800-544-6344

COUPLING/AHA/SM0898

Figure IV-2

These are two types of fusion joints.

Butt fusion joint

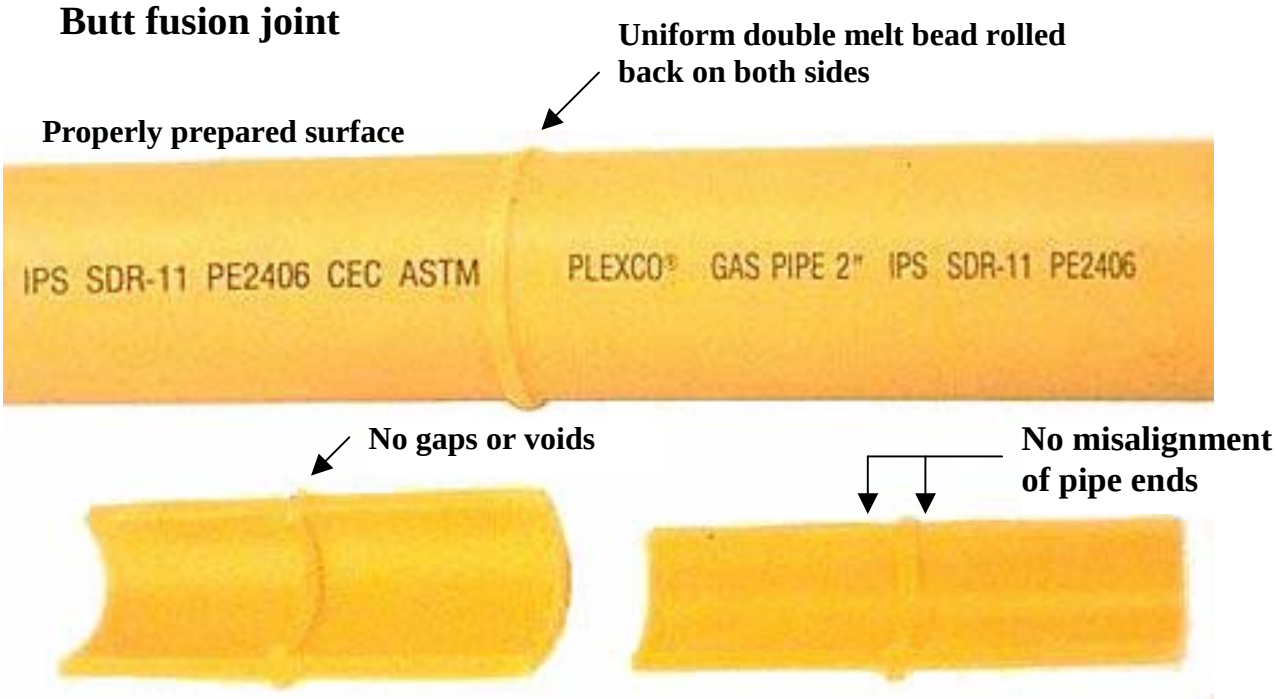

Saddle fusion joint

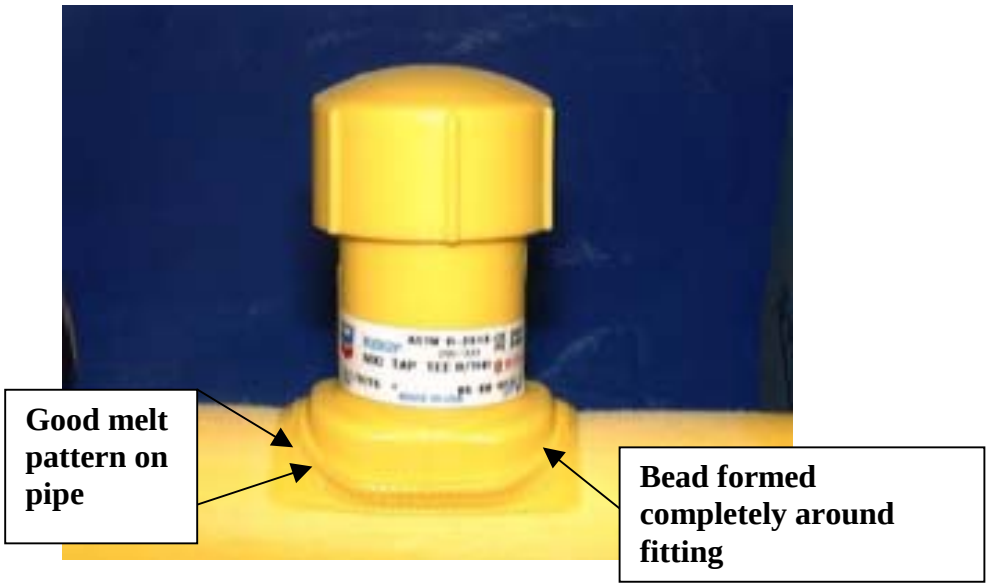

Figure IV-3

Bead (melted and fused portion of plastic pipe)

Note: This for illustration purposes only. Use picture and instructions in pipe manufacturer's manual.

Figure IV-4
An example of a socket fused joint with polyethylene pipe listed in ASTM D2513.

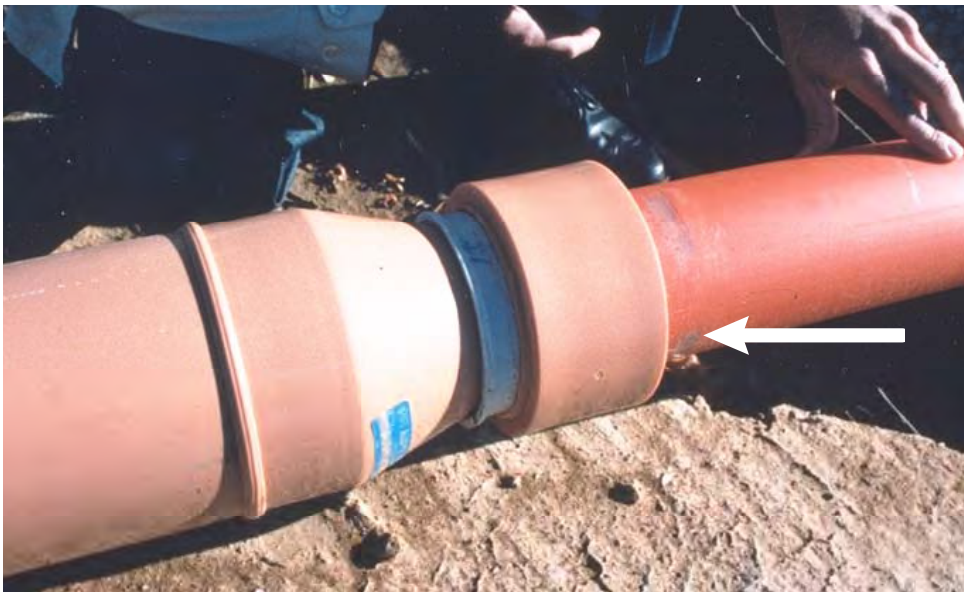

Figure IV-5

An example of a saddle service tee joint made with PE pipe listed in ASTM D2513.

Figure IV-6

BUTT FUSION OF PIPE: ACCEPTABLE APPEARANCE

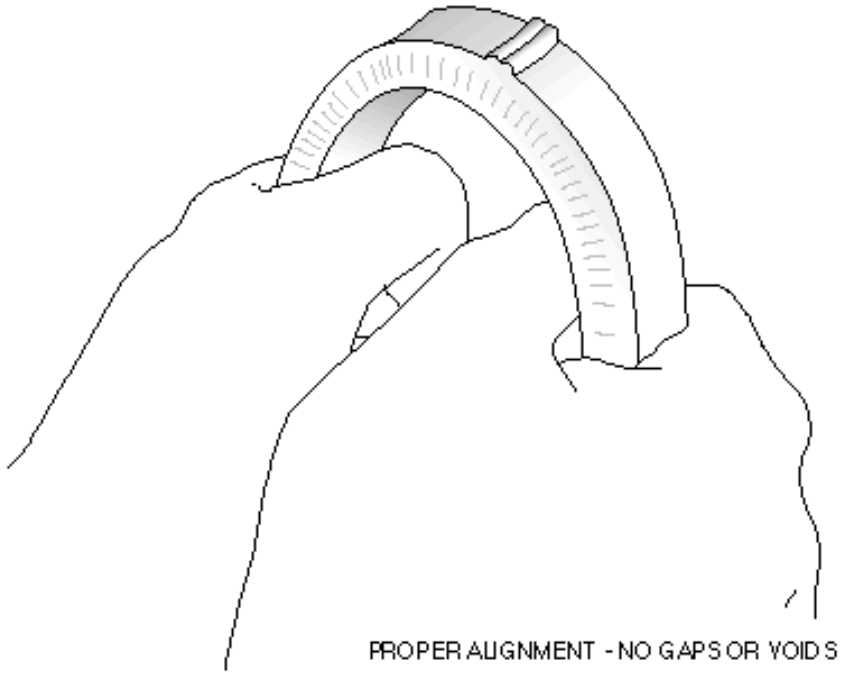

BUTT FUSION OF TUBING: ACCEPTABLE APPEARANCE

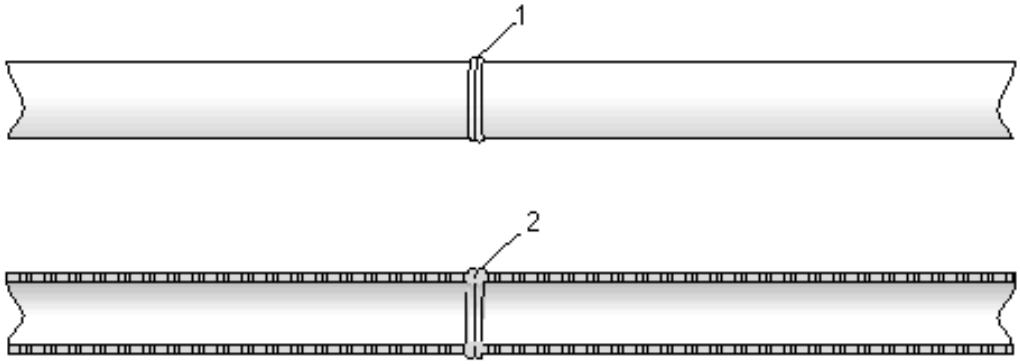

1. PROPER DOUBLE ROLL BACK BEAD
2. PROPER MELT, PRESSURE AND ALIGNMENT

Figure IV-7

SIDEWALL FUSION: ACCEPTABLE APPEARANCE

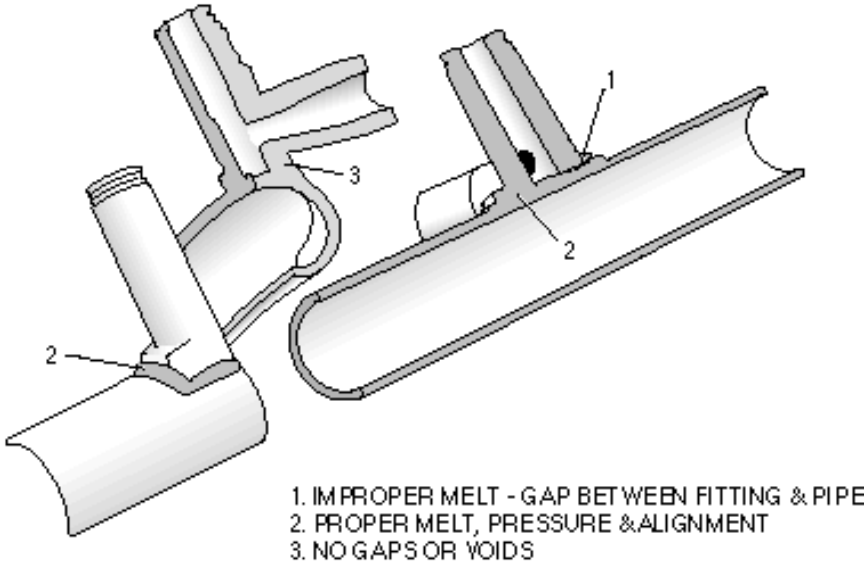

SIDEWALL FUSION: ACCEPTABLE APPEARANCE

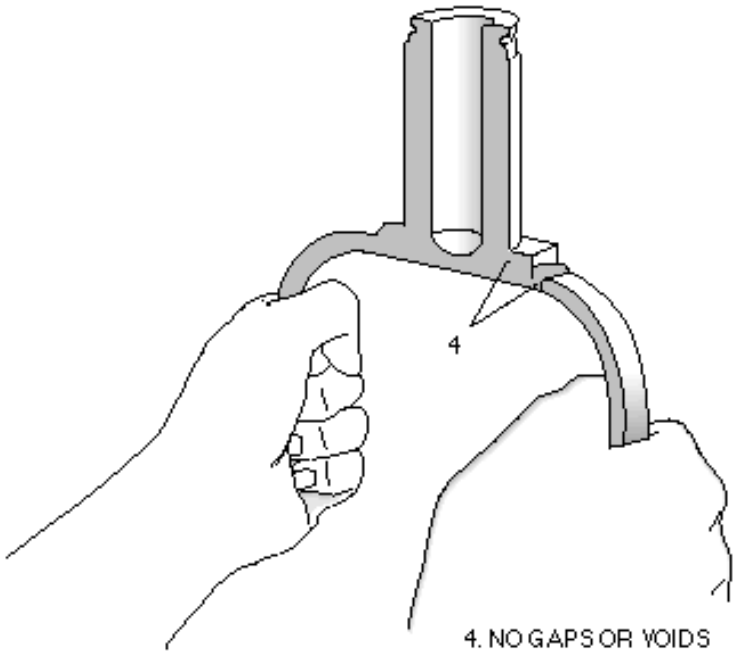

The general guidelines to follow when installing plastic pipe are listed below:

1. Install plastic pipe manufactured under the ASTM D2513 specification. The pipe must have ASTM D2513 marked on it.

Figure IV-8

This is a properly marked PE pipe. ASTM D2513 is clearly marked on the pipe. If ASTM D2513 is not marked on a pipe, do not purchase it.

Figure IV-9

An example of pipe not qualified for gas piping. This is PVC pipe. It was manufactured according to ASTM D2241. The pipe is qualified for use as water pipe, not gas piping. Remember to look for the ASTM D2513 marking on the pipe.

2. Make each joint in accordance with written procedures that have been proven by test to produce strong gas tight joints.

   The manufacturer of the pipe or fitting should supply the operator with the procedures for each product in the manufacturer's manual. When installing the pipe, make certain that these procedures are followed. All joints must be made by a qualified person.

3. Install properly designed valves in a manner which will protect the plastic material. Protect the pipe from excessive twisting, shearing or cutting loads when the valve is operated. Protect from any secondary stresses which might be induced through the valve or its enclosure.

4. Prevent pullout and joint separation. Plastic pipe must be installed in such a manner that expansion and contraction of the pipe will not cause pullout or separation of the joint. Operators unfamiliar with plastic pipe should have a qualified person perform all joining procedures.

5. When inserting plastic pipe in a metal pipe, make allowance for thermal expansion and contraction. Make an allowance at lateral and end connections on inserted plastic pipes, particularly those over 50 feet in length. End connections must be designed to prevent pullout caused by thermal contraction. Fittings used must be able to restrain a force equal to or greater than the strength of the pipe. To minimize the stresses caused by thermal contraction, pipes inserted in the summer should be allowed to cool to ground temperature before tie-ins are made. Inserted pipes, especially those pulled in, should be relaxed, mechanically compressed or cooled to avoid initial tensile stress. Operators unfamiliar with proper insertion techniques must have a qualified person develop the procedures.

6. Repair or replace imperfections or damages before placing the pipe in service.

7. Install all plastic mains and service lines below ground level. Where the pipe is installed in a vault or other below-grade enclosure, it must be completely encased in gas tight metal pipe with fittings that are protected from corrosion. Plastic pipe installation must minimize shear and other stresses. Plastic mains and service lines that are not encased must have an electrically conductive wire or other means of locating the pipe. NFPA 58 requires that the wire not be in direct contact with the pipe. It is recommended that a 6" separation be maintained. Plastic lines must not be used to support external loads.

Figure IV-10

This is an example of an illegal installation which does not meet federal safety regulations. This is a picture of PVC plastic pipe installed aboveground. Remember: **BURY PLASTIC PIPE!**

Figure IV-11

This is an example of another improper installation. Note that a trench was dug but the operator never buried the pipe. Keep in mind that plastic pipe loses some of its strength when exposed to sunlight for a long period of time.

Figure IV-12

An example of metallic wire used to help locate buried plastic pipe. Pipe locators can detect metal but not plastic. Therefore, metallic wire must be buried along with the plastic pipe. A pipe locator can then detect the buried metallic wire and the adjacent plastic pipe.

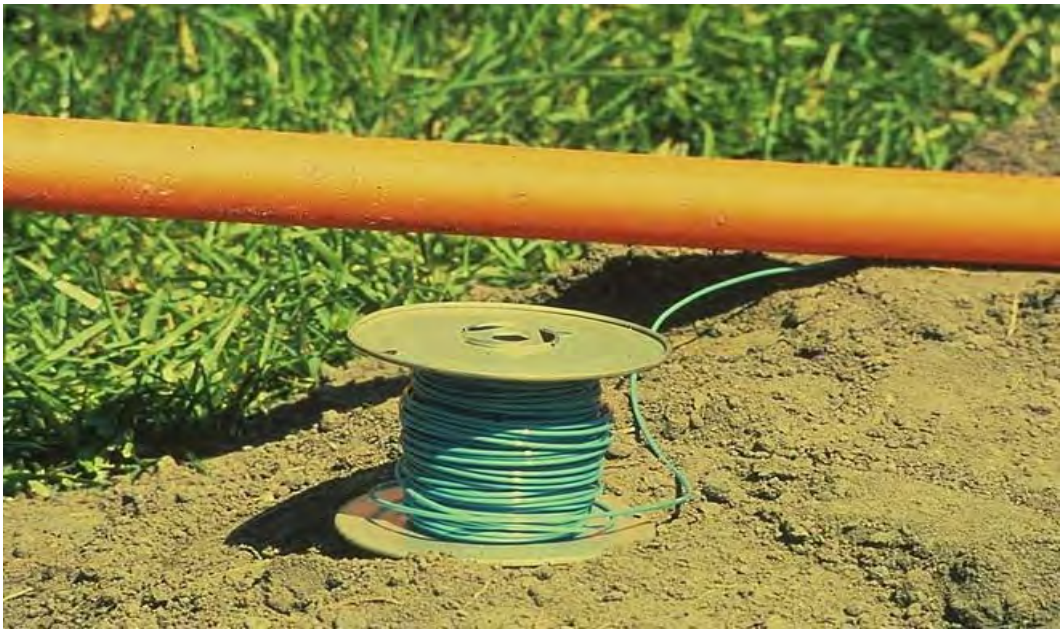

8. Ensure that plastic pipe is continually supported along its entire length by properly tamped and compacted soil. To prevent any shear or other stress concentrations, use external stiffeners at connections to mains, valves, meter risers and other places where compression fittings might be used.

9. In laying plastic pipe, ensure adequate slack (snaking) in the pipe to prevent pullout due to thermal contraction.

10. Lay plastic pipe and backfill with material that does not contain any large or sharp rocks, broken glass or other objects which could cut or puncture the pipe. Where such conditions exist, suitable bedding (sand) and backfill must be provided.

11. Take special care to prevent coal tar type coatings or petroleum base tape from contacting the plastic pipe. It can cause plastic pipe to deteriorate.

12. Static electricity can ignite a flammable gas-air atmosphere. When working with plastic pipe of any kind where there is (or there may be) the possibility of a flammable gas-air atmosphere, take the following precautions:

    - Use a grounded wet tape conductor wound around or laid in contact with the entire section of the exposed piping.

- If gas is already present, wet the pipe starting from the ground end with an approved solution recommended by the pipe manufacturer. Apply tape immediately and leave it in place.
- Wet the tape occasionally with water. Where temperatures are below freezing (O°C/32°F), add glycol to the water to maintain tape flexibility. Ground the tape with a metal pin driven into the ground.
- Do not vent gas using an ungrounded plastic pipe or tubing. Even with grounded metal piping, venting gas with high scale or dust content could generate an electric charge in the gas and an arc could result from the dusty gas cloud back to the pipe and ignite the gas. Vent gas only at a downwind location remote from people or flammable material.
- NOTE: Dissipating the static charge buildup with wet rags, a bare copper wire or other similar techniques may not be as effective as the above procedure. In all cases, use appropriate safety equipment such as flame resistant and static free clothing, breathing apparatus, etc.

13. After installation, ensure that adequate and appropriate maps and records are retained.

REPAIR METHODS - PLASTIC AND METAL

Replacement of gas lines and repair of leaks are highly specialized and potentially hazardous operations. They should be attempted only by persons with adequate LP gas pipeline qualifications.

Leaks in service lines or mains may be repaired by cutting out a short length of pipe containing the leak and replacing it with a new segment of pipe. The pipe segment is commonly attached to the existing line with mechanical couplings, welds, PE fusion, etc. at each end. NFPA 58 requires, if PE pipe is used to replace a section of steel pipe, a tracer wire should be installed to connect the steel pipe ends in order to maintain continuity. Remember that written procedures are required to be followed for each joint. The procedures can be obtained from the manufacturer of the mechanical coupling. If the operator intends to make the repair with a mechanical coupling, then the written procedures must be incorporated into the operations and maintenance plan.

Small leaks in steel service lines or mains, such as those resulting from corrosion pitting, must be repaired with an appropriate leak clamp applied directly over the leak, by replacing a section of pipe or by another acceptable engineering method that can restore the serviceability of the pipe. All steel pipe and fittings installed below ground must be properly coated and cathodically protected before backfilling.

If several leaks are found and extensive corrosion has taken place, the most effective solution is to replace the entire length of deteriorated pipe. The normal installation practices must be followed. They include priming and wrapping of all steel piping, fittings, cathodic protection, etc.

Leaking metal pipe can often be replaced by inserting polyethylene pipe manufactured according to ASTM D2513 in the existing line and making the appropriate connections at both ends. Again, operators are cautioned that allowance for thermal expansion and contraction must be made at lateral and end connections. Operators unfamiliar with insertion techniques, including proper anchoring and offset connections should have a qualified contractor perform this work. Some of the polyethylene pipe manufacturers provide procedures for installation of their products by insertion.

One source of failure in plastic pipe is breaks associated with the transitions between plastic and metal pipes at mechanical fittings. The primary source of the problem is inadequate support of the plastic pipe. It is critical to firmly compact soil under plastic pipe to provide proper support. In practice, however, it is laborious, time consuming and difficult to achieve adequate compaction under such joints. Further, as the soil settles, stress may build and the insert sleeve will cut through the pipe. For example, an insert sleeve must be used in the plastic pipe to provide proper resistance to the clamping pressure of mechanical fittings. This internal tubular sleeve must extend beyond the end of the mechanical fitting. If the pipe is not properly supported at that point, the end of the insert sleeve will act as a shear. This source of failure in plastic pipe can be reduced or eliminated by using a properly designed outer sleeve to prevent stress concentrations at the point where the plastic pipe leaves the mechanical fitting.

The most prevalent cause of breaks or leaks in plastic pipe is "third-party" damage. This is usually caused by an excavator breaking or cutting the pipe. Plastic pipe is more vulnerable to such breaks than steel pipe. The lower strength of plastic pipe, however, is not necessarily a disadvantage. For example, if digging equipment hooks and pulls a steel pipe it may not break, but may be pulled loose from a connection at some distance from the digging. The resulting leaks could go undetected for a period of time and may result in a serious incident. Although there is no assurance that the plastic pipe will not also pull out, it is more likely to break at the point of digging. Then, the break can be detected and repaired. After a leak has been repaired with a coupling or a clamp, a soap-bubble test must be conducted. A CGI/barhole survey of the piping in the vicinity may be considered to ensure no remote pullouts/leaks have occurred.

IT SHOULD BE EMPHASIZED THAT ALL SOURCES OF IGNITION SHOULD BE KEPT AWAY FROM THE LEAK REPAIR AREA. OPEN FLAMES SHOULD NEVER BE USED TO DETECT A GAS LEAK OR TO TEST THE ADEQUACY OF A REPAIR JOB.

CHAPTER V
PROPER LOCATION AND DESIGN OF TANKS REGULATORS AND METER SETS

If the LP gas piping system is jurisdictional to the federal pipeline safety regulations (49 CFR Part 192), jurisdiction ends at the outlet of the customer meter or, if there is no customer meter, where the customer piping begins. See Part 192.1(b)(4)(i) and (ii) for a description of jurisdictional LP gas systems.

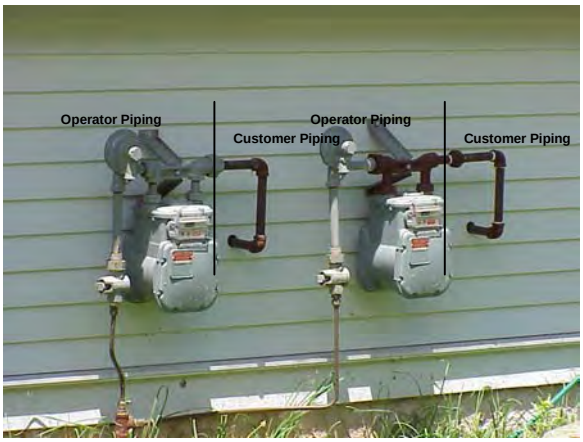

Before locating tanks, regulators and meters, three points must be considered:

- Accessibility
- Protection of tanks, piping and meters
- Protection of people from release of gas at the meter set

TANKS, REGULATORS AND METERS: LOCATION

Install tanks in accordance with NFPA 58, using table 3-2.2.2 to compute the proper distance from buildings and property where building can occur.

Install service regulators and customer meters in a readily accessible location, yet, where they will be protected from physical damage.

If a service regulator is used, it must be installed upstream of the customer meter. The regulator vent must be pointed downward to keep rain from entering the shell and making the regulator inoperable.

Install meter sets outside wherever possible. With a little extra planning and effort, an outside meter set will reduce the possibility of problems in the future. Service regulators installed inside a building must be placed as close as practical to the point where the service line enters the building. The operator must vent the regulator to the outside. Meters installed inside a building must be located in a ventilated area. A meter must be at least 3 feet from any source of ignition or heat that might damage the meter. However, the service regulator vent

discharge must be five feet from any exterior ignition source and 3 feet from any building opening as required by NFPA 58.

NOTE: Be familiar with the location of the pilot light on the water heater and its proximity to the inside meter set.

TANKS, REGULATORS AND METERS: PROTECTION FROM DAMAGE

Tanks and meter sets must be located where they will be protected from physical damage from outside sources. Also of concern is damage from corrosion. Whenever a vehicle could damage tanks or a meter set, a suitable barricade must be installed.

Always ensure that the meter sets are properly supported both upstream and downstream of the meter set.

A good coating of light colored metallic paint on all aboveground piping subject to corrosion provides sufficient protection to retard corrosion. The point where the riser comes out of the ground is susceptible to corrosion on metallic risers and should be inspected periodically.

The outside terminal of each service regulator vent and relief must be:

- rain, snow, ice and insect resistant.
- located where gas from the vent can escape freely into the atmosphere without endangering persons or is not likely to enter a building through an opening such as a door, window or louver in a roof overhang. The point of venting must be 3 feet or more from such building openings, 5 feet from ignition sources.
- protected from water damage in areas subject to flooding. The vent location must be designed to remain above any anticipated flood level.

Customer meter sets must be installed to minimize stresses on connecting piping. Never allow the meter set to be used as an anchor for pet lines or other outside force inducing conditions.

Each pit or vault housing service regulators and customer meters in a road, driveway or parking area must be able to support the vehicular traffic. If there is a question on the design of the pit or vault, it is best to contact a competent construction engineering consultant.

CUSTOMER METER INSTALLATIONS: OPERATING PRESSURE

Die cast or iron case vapor meters can be used at pressures equal to or less than the design pressure, but not to exceed 67% of the manufacturer's shell test pressure. The design pressure must be marked on the meter housing.

Tin or brass type vapor meters must not have operating pressures exceeding 1 psig.

Meters installed after November 12, 1970, must be tested to a minimum of 10 psig.

SERVICE LINES: LOCATION OF VALVES

- Relation to regulator or meter. Each service line valve must be installed upstream of the regulator. If there is no regulator, install the valve upstream of the meter.

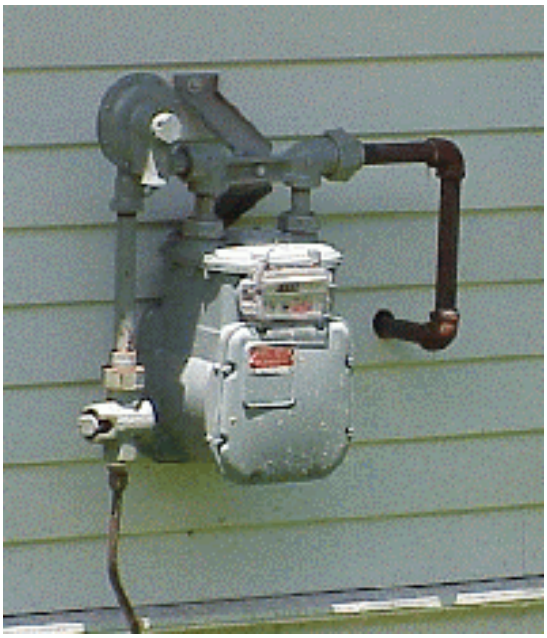

- Outside valves. Each service line must have a shutoff valve in a readily accessible location outside the building.
- Underground valves. Each underground service line valve must be located in a covered durable curb box or standpipe that allows easy operation of the valve. The curb box or standpipe must not put stress on the service line.

NOTE: It is recommended that service regulators and customer meters always be installed outside.

SERVICE LINES: UNDER A BUILDING

Service lines should not be installed under buildings or manufactured homes. If a service line is installed under a building, it must be encased in a gas tight conduit. The conduit must terminate outside aboveground where the gas venting would not be a hazard. The vent must have a fitting to prevent rain, snow, ice or insects from hampering operation.

COMMON PROBLEMS AT RISERS, SERVICE REGULATORS AND CUSTOMER METERS

- Regulator vandalism or damage. This can be a very hazardous problem. If the regulator fails to function for any reason, high pressure gas may enter the house and the appliance. Tall flames may result at the appliance burner and cause a fire. Also, the escape of gas within the building can cause an explosion.
- Obstructed vents. The vent on the regulator should be free of any obstructions. A wire screen installed at the vent should prevent the accumulation of dirt, the intentional insertion of foreign objects or the build up of insect nests (e.g. wasp nests). If the screen is removed, a new one must be inserted. A non-functioning vent could cause regulator failure and present a serious fire or explosion hazard. The vent should be away from windows and air intakes. Vents should also be protected from weather elements.
- Tenants move out. The valve on the meter riser should be equipped with a locking device to be controlled by authorized personnel only. When tenants move out, the gas must be shut off and the valve locked until new tenants move in. The locking device on the shutoff valve also allows repair of appliances without the gas being accidentally turned on.

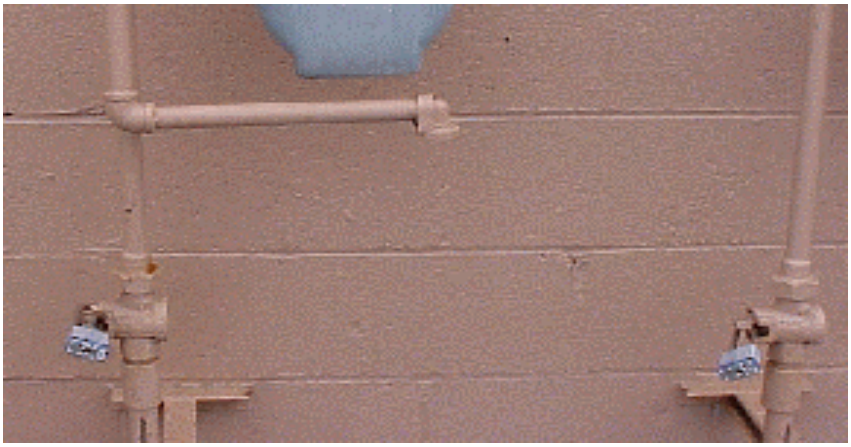

- Riser misuse. The tenants or customers should not be permitted to use the riser and its components for other purposes. Never use the riser as an anchor for laundry lines, plant supports or bicycle racks.

- Corrosion. Check for corrosion on the service riser at ground level. Check for excessive rusting of all aboveground metallic components. Refer to Chapter VIII for more information on the prevention of corrosion.
- Flexible lines. Flexible lines should be UL approved and must be installed aboveground. Flexible lines can become kinked from poor treatment.

CHAPTER VI
ONE-CALL DAMAGE PREVENTION PROGRAM

ONE-CALL SYSTEMS

A one-call notification system provides a telephonic communication link between excavators and operators of underground pipeline and facilities. The heart of the system is an operational center whose main function is to transfer information from excavators about their intended excavation activities to the operators of underground pipelines and facilities participating in the system. Excavators have to make only a single call to an operational center to start the process, thus the name "one-call." Upon receipt of the information, operators of pipelines and facilities that could be affected by the excavation activity arrange for the timely identification and marking of underground facilities that are in the vicinity of the intended activity. When necessary the underground operators inspect the site being excavated and advise the excavator of the need for special measures to protect buried or exposed facilities. One-call notification systems may perform various other functions relevant to protecting underground pipelines and facilities from damage, such as record keeping and public awareness programs.

It is required that LP Gas operators be members of and participate in a qualified one-call damage prevention system. It is recommended that LP operators check with their state one-call systems to determine the laws and regulations that would apply to them.

EXCAVATION

Excavation activities must not be conducted without first ascertaining the location of all underground facilities which could be affected by the excavation.

Excavation activities include excavation, blasting, boring, tunneling, backfilling, the removal of aboveground structures by either explosive or mechanical means and other earth moving operations.

Prior to any excavation, each excavator must serve notice of intent to excavate to the One-Call Center serving the area in which the proposed excavation will occur. Notice must be given to the local One-Call Center in accordance with state regulations in advance of excavation. This requirement may vary from 24 – 72 hours excluding weekends and holidays.

EMERGENCY EXCAVATION

An emergency excavation is an excavation performed to eliminate an imminent danger to life, health or property. Telephonic notice of the emergency excavation must be given as soon as possible to the One-Call Center. If necessary, emergency assistance should be requested from each operator to locate and protect its underground facilities.

PRECAUTIONS TO AVOID DAMAGE

Each person responsible for an excavation activity must:

- Plan the excavation to avoid damage to underground facilities in and near the construction area.
- Perform excavations with procedures and equipment that shall ensure the facility does not sustain damage.
- Provide support for underground facilities in and near the construction area during excavation and backfilling operations to protect the facility.
- Dig test pits as necessary to determine the actual location of LP gas facilities if these facilities or utilities are to be exposed or crossed.

REPAIR OF EXCAVATION DAMAGE

Each person responsible for excavation operations which results in damage to an underground facility must, immediately upon discovery of the damage, notify the operator of the facility of the location and nature of the damage. The operator must be given reasonable time to make the necessary repairs before the excavation or backfilling in the immediate area of damage is continued.

Each person responsible for an excavation activity that damages an underground facility and permits the escape of any flammable or toxic gas shall, immediately upon discovery of the damage, analyze the situation to determine if anyone is in immediate danger and then take necessary action to protect that person. Remember, the one providing the assistance must not perform any actions which would endanger himself. If all people are out of immediate danger, then the person must notify the operator, local police and the local fire department. Then take any actions necessary to protect persons, first, and then property from possible further danger and to minimize the hazards until arrival of the operator personnel or police and fire department personnel.

Partial exemption is granted to operators of pipeline systems, other than municipal systems, where the primary responsibility of the operator does not include the transportation of LP gas.

An example of a partial exemption is an operator of a master meter LP gas system. An operator with this partial exemption does not need a written damage prevention program nor is a current list of local excavators necessary. It is not necessary for the partially exempted operator to notify the public in the vicinity of the excavation nor the local excavators of an operator's damage prevention program. But this operator must still be involved in the One-Call Center program in all other aspects.

CHAPTER VII
OPERATOR QUALIFICATION

All operators of jurisdictional LP gas systems must have a written operator qualification program in place by April 27, 2001. By October 28, 2002, all employees performing covered tasks must be qualified to meet the requirements of 49 CFR Part 192, Subpart N of the federal pipeline safety regulations.

GENERAL REQUIREMENTS

It is the responsibility of the operator to:

- Identify covered tasks
- Determine who must be qualified
- Determine the method of qualification
- Determine re-qualification procedures
- Keep records

COVERED TASK

A covered task is an activity identified by the operator that fulfills all of the following four characteristics:

- Is performed on a pipeline facility.
- Is an operations or maintenance task (Note: This includes an emergency response task.).
- Is performed as a requirement of 49 CFR Part 192 of the federal pipeline safety regulations.
- Affects the operation or integrity of the pipeline.

OPERATOR QUALIFICATION PROGRAM

The written qualification program must include provisions to:

- Identify covered tasks.
- Ensure that individuals are qualified.
- Allow unqualified individuals to perform a covered task while under the observation of a qualified individual.
- Evaluate the individual's qualifications in the event of an incident.
- Evaluate the individual if there is reason to believe that the individual is no longer qualified.
- Inform the qualified individual of any changes affecting the covered task.
- Determine intervals for re-qualification.

RECORDKEEPING

Qualification records must be maintained as long as the individual is performing the covered task. Records of individuals no longer performing a covered task must be kept for five years.

Records must include:

- Identification of qualified individuals.
- Covered tasks the individual is qualified to perform.
- Date of current qualification.
- Qualification method.

CHAPTER VIII
CORROSION CONTROL

FEDERAL REQUIREMENTS

This chapter contains a basic description of the corrosion control requirements contained in the pipeline safety regulations. The complete text of the corrosion control requirements can be found in 49 CFR Part 192, Subpart I.

Procedures and Qualifications

Operators must establish procedures to implement and maintain a corrosion control program for their piping system. These procedures should include design, installation, operation and maintenance activities on a cathodic protection system. A person qualified in pipeline corrosion control methods must carry out these procedures.

Techniques for Compliance

The following is a list of sources where operators of LP gas systems can find qualified personnel to develop and carry out a corrosion control program:

- There are many consultants and experts who specialize in cathodic protection. Many advertise in gas trade journals.
- Another source, for LP operators, is an experienced corrosion engineer or technician working for a local gas utility company. Such experts may be able to implement cathodic protection for LP gas operators or refer them to local qualified corrosion engineers.
- OPS suggests that operators of LP gas systems encourage their respective trade associations such as (The National Propane Gas Association) to gather and maintain records of available consultants or contractors who are qualified in their specific region.
- The local chapter of the National Association of Corrosion Engineers (NACE) may be able to provide useful information.
- Operators who are unsure of a consultant's qualification in corrosion control should contact operators who have hired the consultant in the past.

Corrosion Control Requirements for Pipelines Installed After July 31, 1971

All buried metallic pipe installed after July 31, 1971, must be properly coated and have a cathodic protection system designed to protect the pipe in its entirety.

Newly constructed metallic pipelines must be coated before installation and must have a cathodic protection system installed and placed in operation in its entirety within one year after construction of the pipeline.

Cathodic protection requirements do not apply to electrically isolated, metal alloy fittings in plastic pipelines if the alloyage of the fitting provides corrosion control and if corrosion pitting will not cause leakage.

Corrosion Control Requirements for Pipelines Installed Before August 1, 1971

For LP gas systems, the pipeline safety regulations require that underground bare or ineffectively coated distribution pipelines and underground tanks be cathodically protected in areas of active corrosion.

The operator must determine areas of active corrosion by (a) electrical survey, (b) where electrical survey is impractical, by the study of corrosion and leak history records or by leak detection surveys.

Active corrosion means continuing corrosion, which, unless controlled, could result in a condition that is detrimental to public safety.

As a guideline for operators when determining corrosion to be detrimental to public safety (active corrosion), OPS recommends the following:

- For LP gas operators, all continuing corrosion occurring on underground metallic pipes and tanks should be considered active and pipes should be cathodically protected, repaired or replaced.
- OPS recommends that operators of LP gas systems and their consultants use these following guidelines in determining where it is impractical to do electrical surveys to find areas of active corrosion:

    a. Areas of fluctuating stray dc currents, such as those caused by electrical railway systems
    b. Where the pipeline is more than 2 feet from the edge of and under a paved street or within wall to wall pavement areas.
    c. Pipelines in a common trench with other metallic structures.

Electrical surveys may prove to be impractical due to conditions other than those listed above. The operator must demonstrate the impracticability of an electrical survey.

In areas where electrical surveys cannot be run to determine corrosion, the operator should run leakage surveys on a more frequent basis. OPS recommends that these surveys be run at least once a year.

Electrical surveys to find active corrosion must be run by a person qualified in pipeline corrosion control methods.

Coating Requirements

All metallic pipe installed below ground, as a new or replacement pipeline system must be coated in its entirety. Types of coatings and handling practices are discussed later in this chapter.

Examination of Exposed Pipe

Whenever buried pipe is exposed or dug up, the operator is required to examine the exposed portion of the pipe for evidence of corrosion on bare pipe or for deterioration of the coating on coated pipe. A record of this examination must be maintained. If the coating has deteriorated or the bare pipe has evidence of corrosion, remedial action must be taken.

Criteria for Cathodic Protection

Operators must meet one of five criteria listed in Appendix D of 49 CFR Part 192 to comply with the pipeline safety regulations for cathodic protection.

The criteria that most operators of LP gas systems choose is a (cathodic) voltage of at least -0.85 volt with reference to a saturated copper-copper sulfate half-cell. NOTE: IR drop must be considered. IR drop is the difference between the voltage at the top of the pipe and the voltage at the surface of the earth.

Monitoring

A piping system that is under cathodic protection must be systematically monitored. Tests for effectiveness of cathodic protection must be done at least once every year. Records of this monitoring must be maintained.

Short, separately protected service lines or short, protected mains may be surveyed on a sampling basis. At least 10 percent of these short sections and services must be checked each year so that all short sections in the system are tested in a 10-year period.

Examples of short, separately protected pipe in an LP gas system would be:

- Steel service lines connected to, but electrically isolated from, the main.
- Steel service risers that have cathodic protection provided by an anode attached to a riser that is installed on plastic service lines.

OPS recommends that if a small number of isolated protected sections of pipeline exist in the system, the operator include all sections in the annual survey.

When using rectifiers to provide cathodic protection, each rectifier must be inspected six times every year to ensure that the rectifier(s) is operating properly. The intervals must not exceed 2½ months. Records must be maintained. Operators must take prompt action to correct any deficiencies indicated by the monitoring.

Electrical Isolation

Pipelines must be electrically isolated from other underground metallic structures (unless electrically interconnected and cathodically protected as a single unit). For illustrations of where meter sets are commonly electrically insulated, see Figures VIII-8, VIII-13 and VIII-14 in this chapter.

Test Points

Each pipeline under cathodic protection must have sufficient test points for electrical measurement to determine the adequacy of cathodic protection. Test points should be shown on a cathodic protection system map.

Internal Corrosion Inspection

Whenever a section of pipe is removed from the system, the internal surface must be inspected for evidence of corrosion. Remedial steps must be taken if internal corrosion is found. Be sure to keep records of this inspection.

Atmospheric Corrosion

Newly installed aboveground pipelines must be cleaned and coated or jacketed with a material suitable for the prevention of atmospheric corrosion. Aboveground pipe, including meters, regulators, and measuring stations, must be inspected for atmospheric corrosion. It is recommended that this be done on an annual basis during other annual maintenance. Remedial action must be taken if atmospheric corrosion is found.

Remedial Measures

All steel pipe used to replace an existing pipe must be coated and cathodically protected. Each segment of pipe that is repaired because of corrosion leaks must be cathodically protected.

Records

Operators must maintain records or maps of their cathodic protection system. Records of all tests, surveys, or inspections required by the pipeline safety code must be maintained.

SOME PRINCIPLES AND PRACTICES OF CATHODIC PROTECTION

This section gives operators with little or no experience in cathodic protection, a review of the general principles and practices of cathodic protection. Common causes of corrosion, types of pipe coatings and criteria for cathodic protection are among the topics. A checklist of steps which an operator of an LP gas system may use to determine the need for cathodic protection is included. Basic definitions and illustrations are used to clarify the subject. This section does not go into great depth. Therefore, reading this section alone will not qualify an operator to design and implement cathodic protection systems.

Basic Terms

Corrosion - The deterioration of metal pipe. Corrosion is caused by a reaction between the metallic pipe and its surroundings. As a result, the pipe deteriorates and may eventually leak. Although corrosion cannot be eliminated, it can be substantially reduced with cathodic protection. (See Figure VIII-1.)

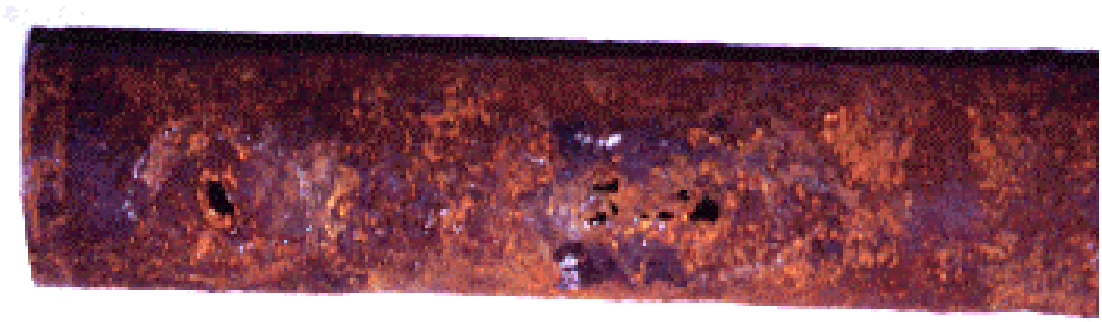

Figure VIII-1 Bare Pipe - not under cathodic protection

An example of bare steel pipe installed for gas service. Note the deep corrosion pits that have formed. Operators should never install bare steel pipe or bare tanks underground. Operators should use either polyethylene pipe manufactured according to ASTM D2513 or coated steel pipe as new or replacement pipe. If steel pipe is installed, it must be coated and cathodically protected.

Cathodic protection - A procedure by which an underground metallic pipe is protected against corrosion. A direct current is impressed onto the pipe by means of a sacrificial anode or a rectifier. Corrosion will be reduced where sufficient current flows onto the pipe.

Anode (sacrificial) - An assembly consisting of a bag usually containing a magnesium or zinc ingot and other chemicals which is connected by wire to an underground metal piping system. It functions as a battery that impresses a direct current on the piping system to retard corrosion. (See Figure VIII-2.)

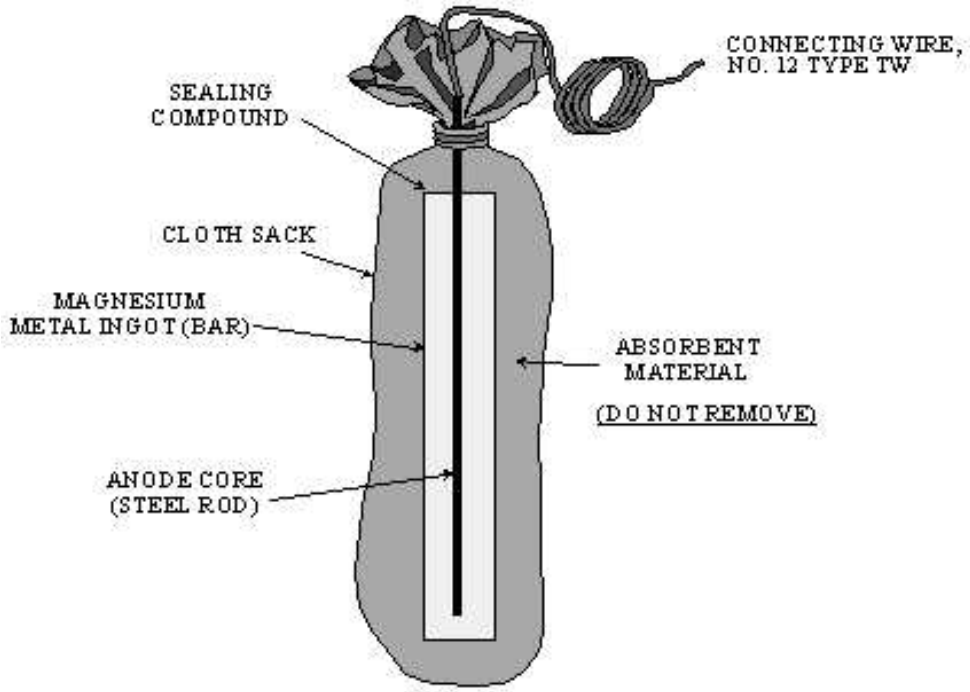

Figure VIII-2 Typical Magnesium (Mg) Anode

Sacrificial protection - The reduction of corrosion of a metal (usually steel in a gas system) in an electrolyte (soil) by galvanically coupling the metal (steel) to a more anodic metal (magnesium or zinc.) (See Figure VIII-3.) The magnesium or zinc will sacrifice itself (corrode) to retard corrosion in the steel pipe.

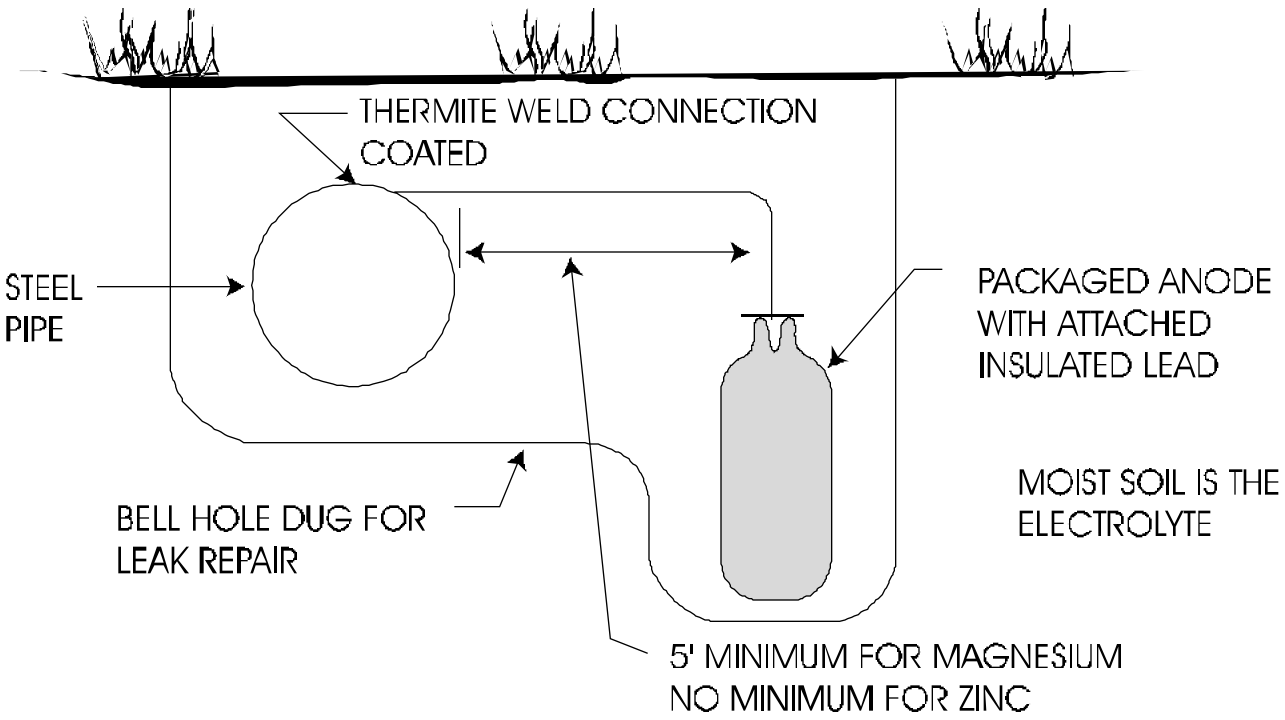

Figure VIII-3

Zinc and magnesium are more anodic than steel. Therefore, they will corrode to provide cathodic protection for steel pipe.

Rectifier - An electrical device that changes alternating current (ac) into direct current (dc). This current is then impressed on an underground metallic piping system to protect it against corrosion. (See Figure VIII-4.)

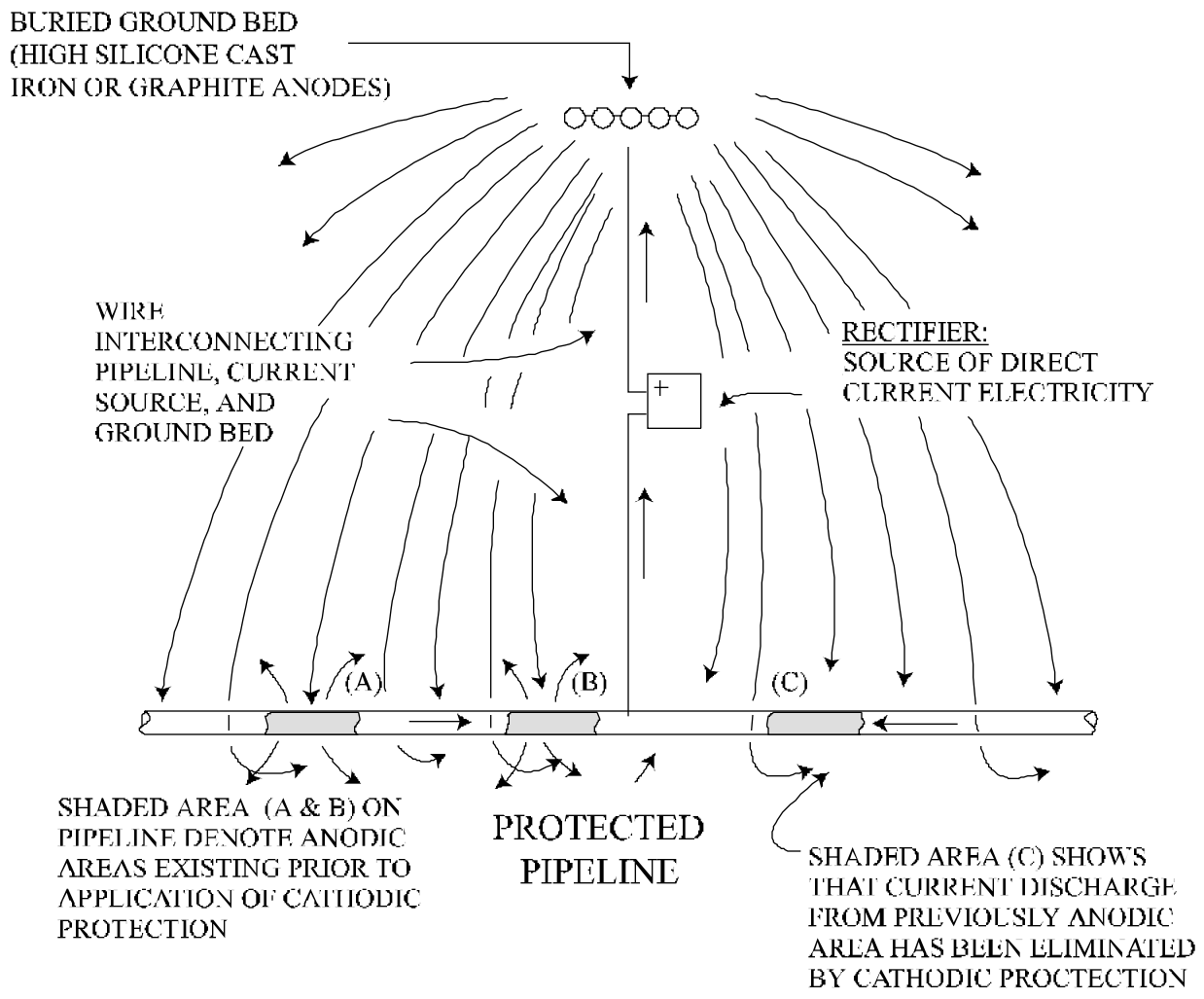

Figure VIII-4

This illustrates how cathodic protection can be achieved by use of a rectifier. Make certain the negative terminal of the rectifier is connected to the pipe. **NOTE**: If the reverse occurs (positive terminal to pipe), the pipe will corrode much faster.

Potential - The difference in voltage between two points of measurement. (See Figure VIII-5.)

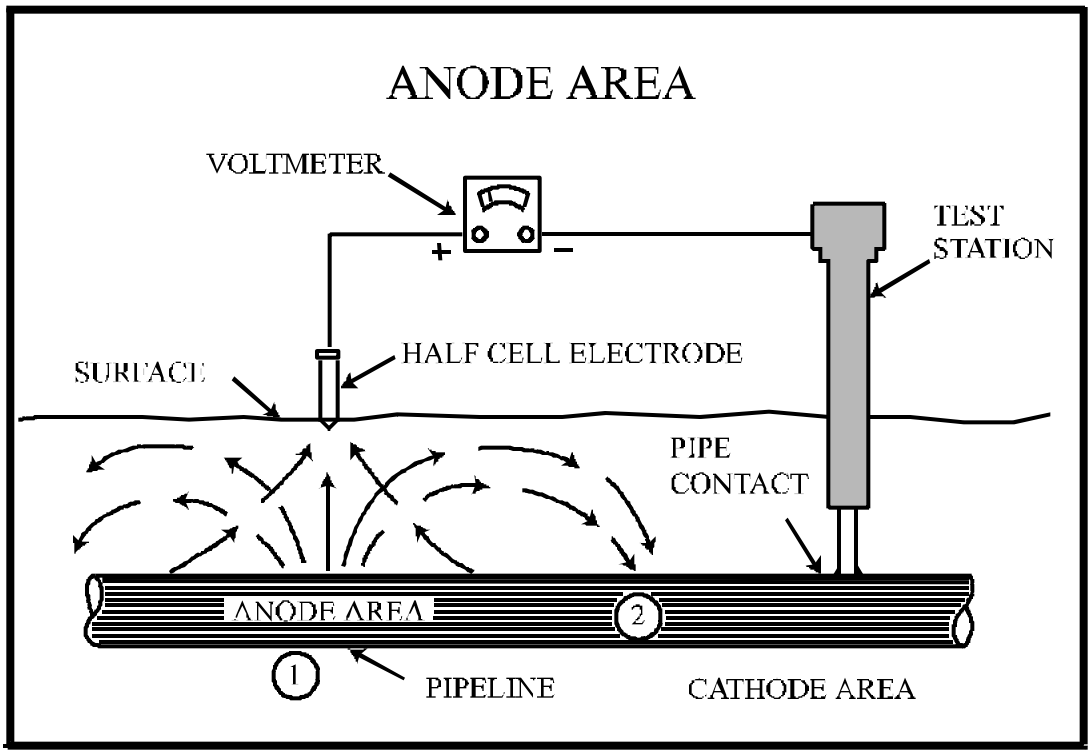

Figure VIII-5

The voltage potential in this example is the difference between points 1 and 2. Therefore, the current flow is from the anodic area (1) of the pipe to the cathodic area (2). The half-cell is an electrode made up of copper immersed in copper-copper sulfate ($CuCuSO_4$).

Pipe-to-soil potential - The potential difference between a buried metallic structure (piping system) and the soil surface. The difference is measured with a half-cell reference electrode (see definition of reference electrode that follows) in contact with the soil. (See Figure VIII-6.)

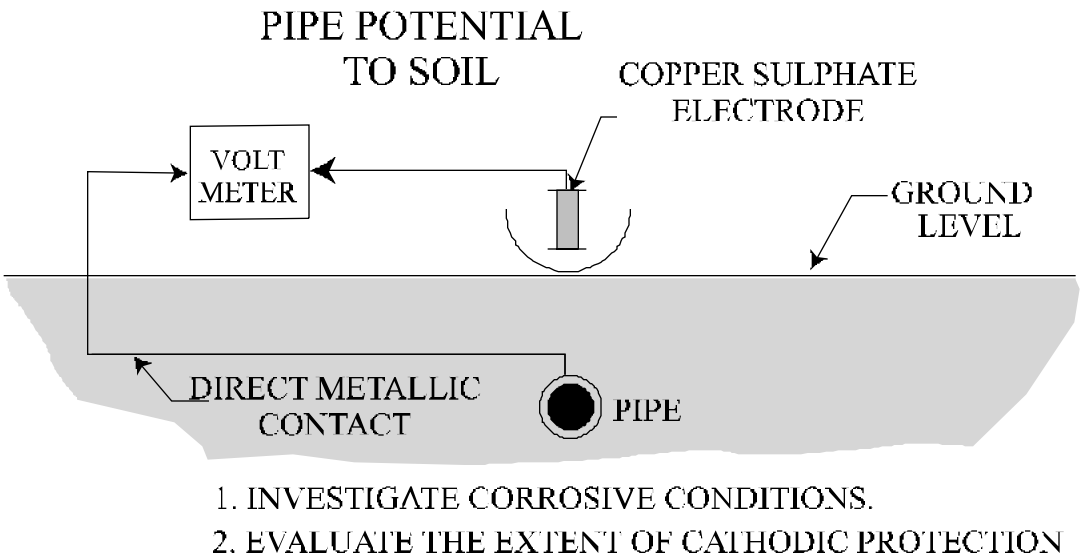

Figure VIII-6

If the voltmeter reads at least -0.85 volt, the operator can usually consider that the steel pipe has cathodic protection. **NOTE**: Be sure to take into consideration the voltage (IR) drop that is the difference between the voltage at the top of the pipe and the voltage at the surface of the earth.

Reference electrode (commonly called a half-cell) - A device which usually has copper immersed in a copper sulfate solution. The open circuit potential is constant under similar conditions of measurement. (See Figure VIII-7.)

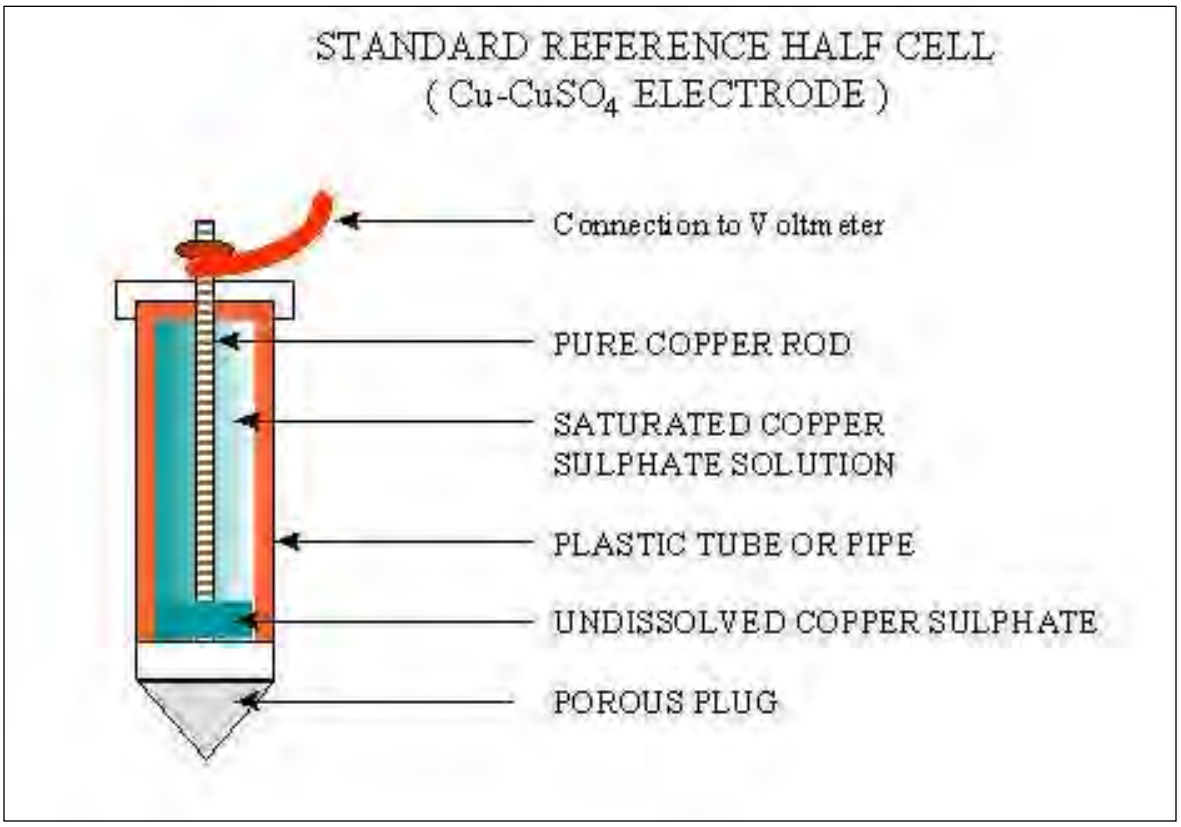

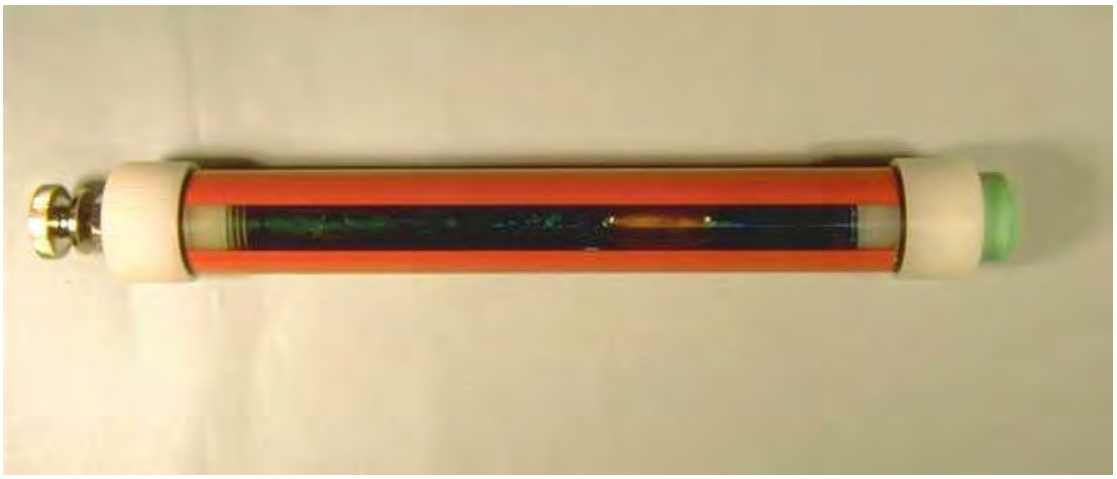

Figure VIII-7 Reference Electrode – A saturated copper-copper sulfate half-cell.

Short or **corrosion fault** - An accidental or incidental contact between a cathodically protected section of a piping system and other metal structures (water pipes, buried tanks or unprotected section of a gas piping system.) (See Figure VIII-8.)

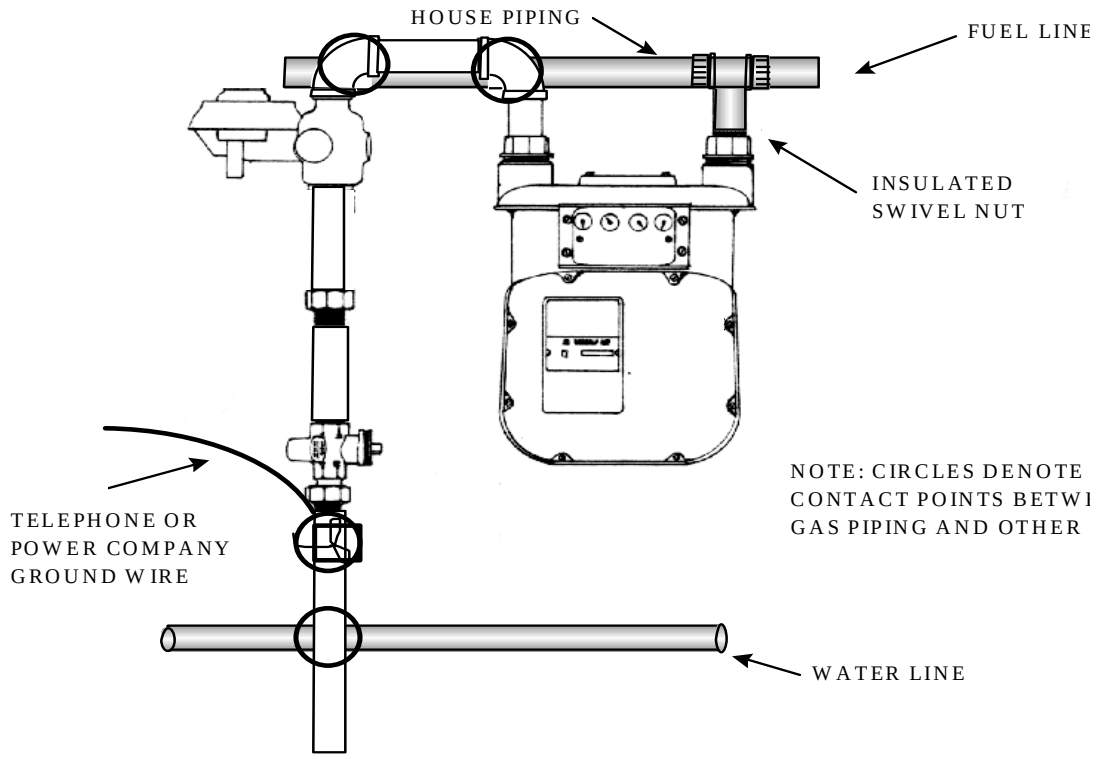

Figure VIII-8 Typical Meter Installation Accidental Contacts
(Meter Insulator Shorted Out by House Piping, etc.)

Unshaded piping shows company piping from service entry to meter insulator at location shown on sketch above. Shaded areas show house piping, electrical cables, etc. The circled locations are typical points where the company piping (unshaded) can come in metallic contact with house piping. This causes shorting out or "bypassing" of the meter insulator. The only way to clear these contacts permanently is to move the piping that is in contact. The use of wedges, etc., to separate the piping <u>is not acceptable</u>. If the piping cannot be moved, install a new insulator between the accidental contact and the service entry.

Stray current - Current flowing through paths other than the intended circuit. (See Figure VIII-9.)

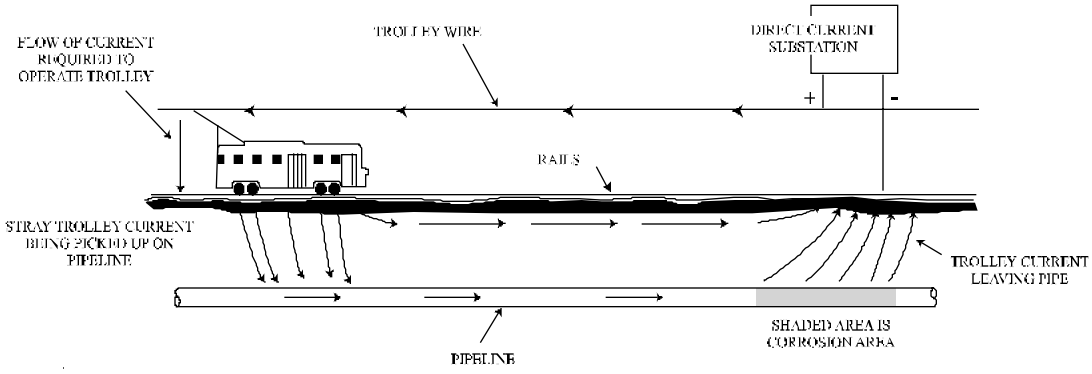

Figure VIII-9

This drawing illustrates an example of stray dc current getting onto a pipeline from an outside source. This can cause severe corrosion in the area where the current eventually leaves the pipe. Expert help is needed to correct this type of problem.

Stray current corrosion - Metal destruction or deterioration caused primarily by stray dc current in the soil around a pipeline.

Galvanic series - A list of metals and alloys arranged according to their relative potentials in a given environment. (See Table 1.)

Galvanic corrosion - Occurs when any two of the metals in Table 1 are connected in an electrolyte (soil). Galvanic corrosion is caused by the difference in the potentials of the two metals.

Table 1

METAL	Potentials VOLTS*	
Commercially pure magnesium	-1.75	Anodic
Magnesium alloy (6% A1, 3% Zn, 0.15% Mn)	-1.6	
Zinc	-1.1	
Aluminum alloy (5% zinc)	-1.05	
Commercially pure aluminum	-0.8	
Mild steel (clean and shiny)	-0.5 to -0.8	
Mild steel (rusted)	-0.2 to -0.5	
Cast iron (not graphitized)	-0.5	
Lead	-0.5	
Mild steel in concrete	-0.2	
Copper, brass, bronze	-0.2	
High silicon cast iron	-0.2	
Mill scale on steel	-0.2	
Carbon, graphite, coke	+0.3	Cathodic

* Typical potential in natural soils and water, measured with respect to a copper-copper sulfate reference electrode.

When electrically connected in an electrolyte, any metal in the table will be anodic (corrode relative to) to any metal below it. That is, the more anodic metal sacrifices itself to protect the metal (pipe) lower in the table.

FUNDAMENTAL CORROSION THEORY

For corrosion to occur there must be four elements: electrolyte, anode, cathode and a metallic return circuit. A metal will corrode at the point where current leaves the anode. (See Figure VIII-10.) NOTE: Dissimilar soils may create an environment that enhances corrosion.

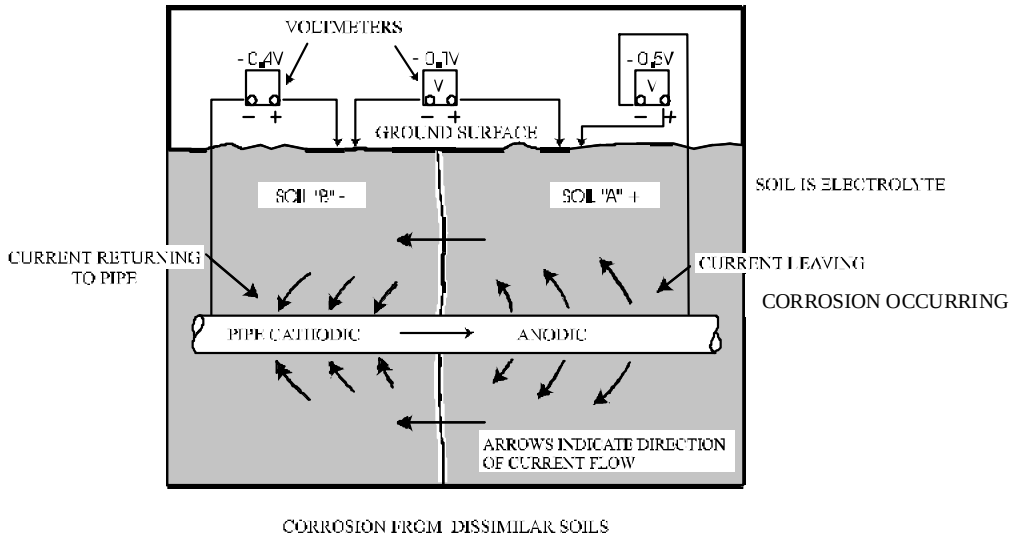

Figure VIII-10
A corrosion cell may be described as follows:

- Current flows through the electrolyte from the anode to the cathode. It returns to the anode through the return circuit.

- Corrosion occurs whenever current leaves the metal (pipe, fitting, etc.) and enters the soil (electrolyte). The area where current leaves is said to be anodic. Corrosion, therefore, occurs in the anodic area.

- Current is picked up at the cathode. No corrosion occurs here. The cathode is protected against corrosion. Polarization (hydrogen film buildup) occurs at the cathode. When the film of hydrogen remains on the cathode surface, it acts as an insulator and reduces the corrosion current flow.

- The flow of current is caused by a potential (voltage) difference between the anode and the cathode.

TYPES OF CATHODIC PROTECTION

There are two basic methods of cathodic protection: the galvanic anode system and the impressed current system.

Galvanic anodes are commonly used to provide cathodic protection on gas distribution systems. Impressed current systems are normally used for transmission lines. However, if properly designed, impressed current can be used on a distribution system. (See Figure VIII-11.)

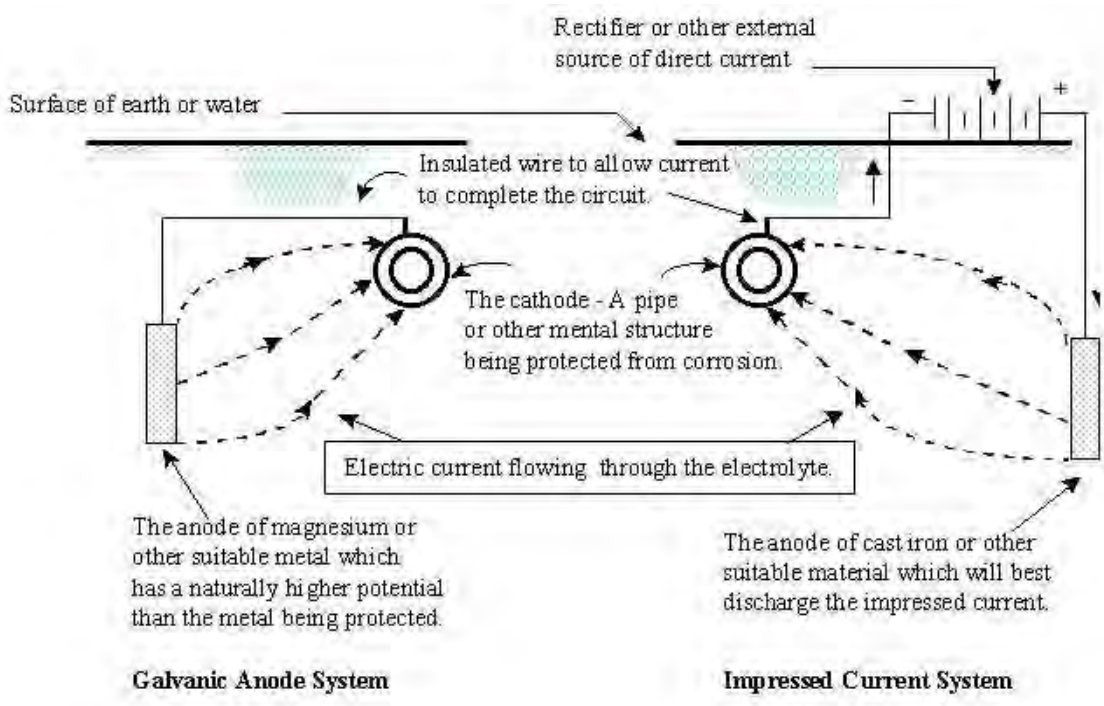

Figure VIII-11

Any current, whether galvanic or stray, that leaves the pipeline causes corrosion. In general, corrosion control is obtained as follows:

Galvanic Anode Systems

Anodes are "sized" to meet current requirements of the resistivity of the environment (soil.) Anodes are made of materials such as magnesium (Mg), zinc (Zn) or aluminum (Al). They are usually installed near the pipe and connected to the pipe with an insulated conductor. They are sacrificed (corroded) instead of the pipe. (See Figures VIII-3, VIII-11 and VIII-12.)

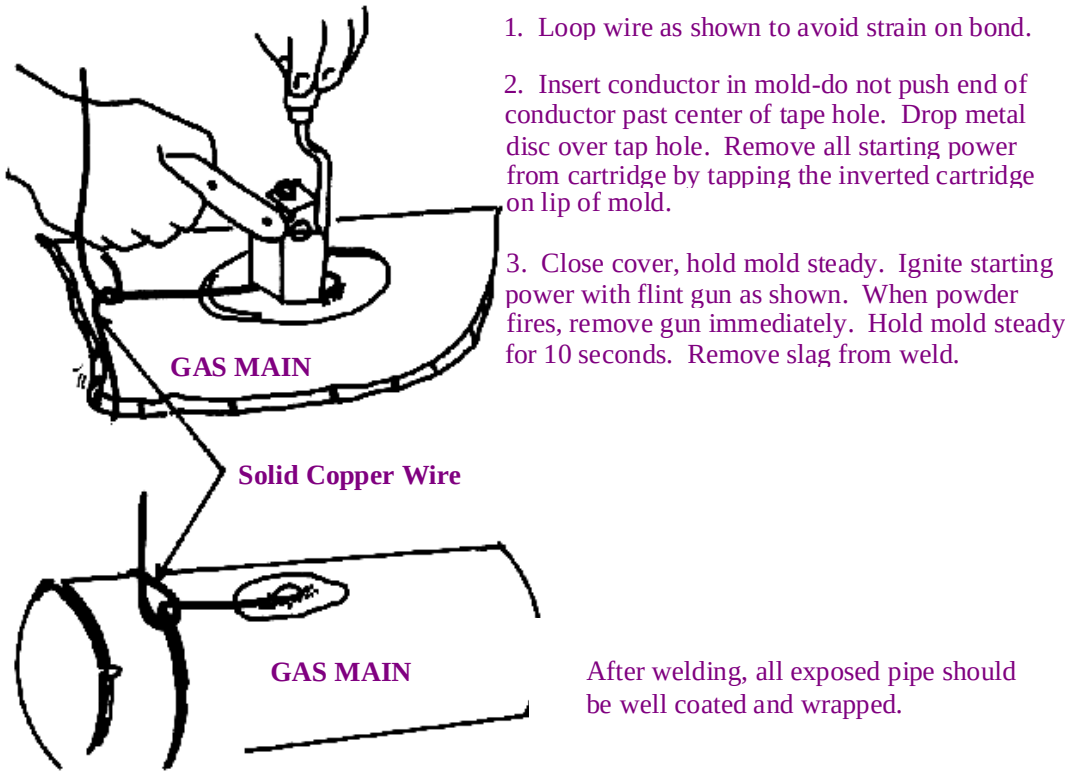

Figure VIII-12 Typical procedure for installing a Mg Anode

Impressed Current Systems

Anodes are connected to a direct current source, such as a rectifier or generator. These systems are normally used along transmission pipelines where there is less likelihood of interference with other pipelines. The principle is the same except that the anodes are made of corrosion resistant material such as graphite, high silicon cast iron, lead-silver alloy, platinum or scrap steel.

INITIAL STEPS IN DETERMINING THE NEED TO CATHODICALLY PROTECT A SMALL GAS DISTRIBUTION SYSTEM

1. Determine type(s) of pipe in the system: bare steel, coated steel, cast iron, plastic, galvanized steel, ductile iron or other.

2. Date the gas system was installed:

   Year the pipe was installed (steel pipe installed after July 1, 1971, must be cathodically protected in its entirety).

   Who installed the pipe? By contacting the contractor and other operators who had pipe installed by the same contractor, operators may be able to obtain valuable information as:

- Type of pipe in the ground.

- If pipe is electrically isolated.

- If the gas pipe is in a common trench with other utilities.

3. Pipe location - map/drawing. Locate old construction drawings or current system maps. If no drawings are available, a metallic pipe locator may be used.

4. Before the corrosion engineer arrives, it is a good idea to make sure customer meters are electrically insulated. If the system has no meter, check to see if the gas pipe is electrically insulated from house or mobile home piping. (See Figure VIII-13.)

5. Contact an experienced corrosion engineer or consulting firm. Try to complete steps 1 through 4 before contracting a consultant.

6. Use of Consultant.

   A sample method, which may be used by a consultant to determine cathodic protection needs, is the following:

   - An initial pipe-to-soil reading will be taken to determine if the system is under cathodic protection.

   - If the system is not under cathodic protection, the consultant should clear underground shorts or any missed meter shorts. (The consultant will probably use a tone test.)

   - After the shorts are cleared, another pipe-to-soil test should be taken. If the system is not under cathodic protection, a current requirement test should be run to determine how much electrical current is needed to protect the system.

   - Additional tests such as a soil resistivity test, bar hole examination and other electrical tests may be needed. The types of tests needed will vary for each gas system.

   - Remember to retain copies of all tests run by the corrosion engineer.

7. Cathodic Protection Design

   The experienced corrosion engineer or gas consultant, based on the results of testing, will design a cathodic protection system that best suits the gas piping system.

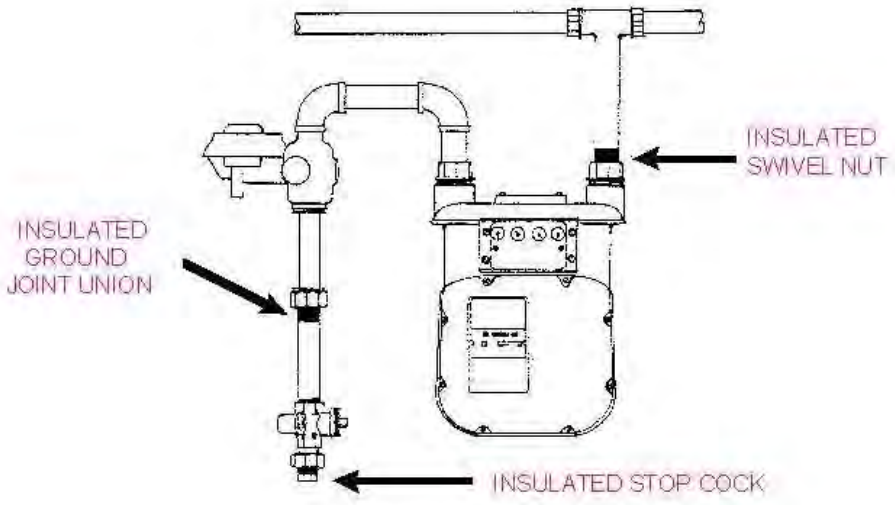

Figure VIII-13
Places where a meter installation may be electrically isolated.

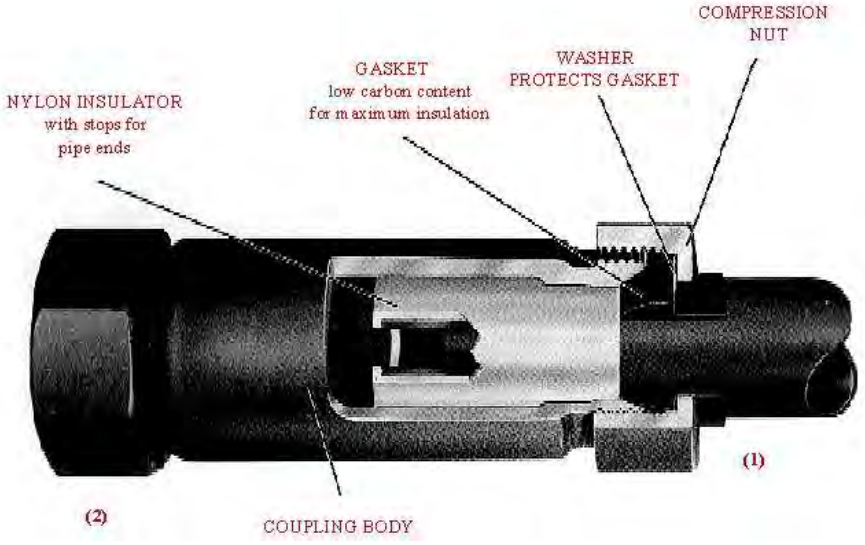

Figure VIII-14

Illustration of an insulated compression coupling used on meter sets to protect against corrosion. Pipe connection by this union will be electrically insulated between the piping located on side one (1) and the piping located on side two (2).

Figure VIII-15 Insulation tester

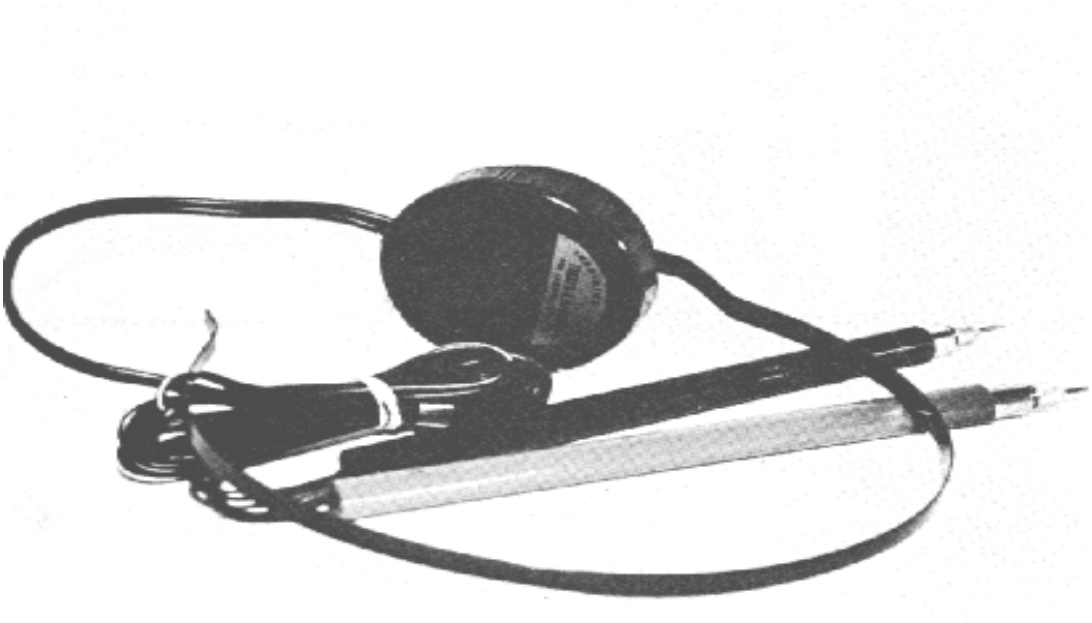

This insulation tester consists of a magnetic transducer mounted in a single earphone headset with connecting needlepoint contact probes. It is a "go" or "no go" type tester which operates from low voltage current present on all underground piping systems, thus eliminating the necessity of outside power sources or costly instrumentation and complex connections. By placing the test probes on the metallic surface on either side of the insulator a distinct audible tone will be heard if the insulator is performing properly. Absence of an audible tone indicates a faulty insulator. Insulator effectiveness can be determined quickly using this simple, easy-to-operate tester.

CRITERIA FOR CATHODIC PROTECTION

There are five criteria listed in Appendix D of Part 192, to qualify a pipeline as being cathodically protected. Operators can meet the requirements of any one of the five to be in compliance with the pipeline safety regulations. Most systems will be designed to Criterion 1.

Criterion 1: With the protective current applied, a voltage of at least -0.85 volt measured between the pipeline and a saturated copper-copper sulfate half-cell. This measurement is called the pipe-to-soil potential reading. (See Figure VIII-16)

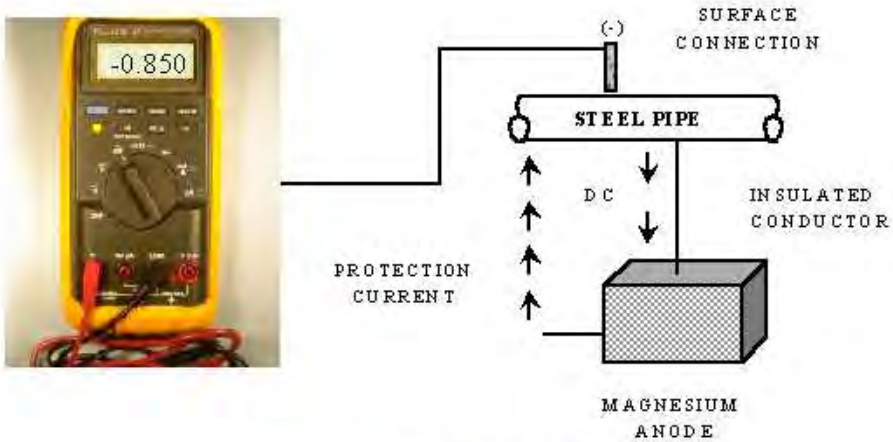

Figure VIII-16 Pipe to soil potential reading

This is a pipe-to-soil voltage meter with reference cell attached. This is a simple meter to use and is excellent for simple "go-no-go" type monitoring of a cathodic protection system. If meter reaches at least -0.85 volt*, the operator knows that the steel pipe is under cathodic protection. If not, remedial action must be taken promptly.

***NOTE**: **Be sure to take into consideration the voltage drop (IR drop) that is the difference between the voltage at the top of the pipe and the voltage at the surface of the earth.**

COATINGS

There are many different types of coatings on the market. The better the coating application, the less electrical current needed to cathodically protect the pipe.

Mill Coated Pipe

When purchasing steel pipe for underground gas services, operators should purchase mill coated pipe (i.e., pipe coated during the manufacturing process). Some examples of mill coatings are:

- Extruded polyethylene or polypropylene plastic coatings.
- Coal tar coatings.
- Enamels.
- Mastics.
- Epoxy.

A qualified (corrosion) person can help select the best coating for an LP gas system. A coating consultant will be able to give master meter operators the names and locations of nearby suppliers of mill coated gas pipe. When purchasing steel pipe, remember to verify that the pipe was manufactured according to one of the specifications listed in Chapter III of this manual. This can be verified by a bill of lading or by the markings on mill coated pipe.

Patching

Tape material is a good choice for external repair of mill coated pipe. Tape material is also a good coating for both welded and mechanical joints made in the field. One advantage is that these types may be applied cold. Some tapes in use today are:

- PE and PVC tapes with self-adhesive backing applied to a primed pipe surface.
- Plastic films with butyl rubber backing applied to a primed surface.
- Plastic films with various bituminous backings.

Consult a pipe supplier before purchasing tapes. Tapes must be compatible with the mill coating on the pipe.

Coating Application Procedures

When repairing and installing metal pipe, be sure to coat bare pipes, fittings, etc. It is absolutely essential that the instructions supplied by the manufacturer of the coating be followed precisely. Time and money is wasted if the instructions are not followed.

Some general guidelines for installation of pipe coatings:

- Properly clean the pipe surface (remove soil, oil, grease and any moisture).

- Use careful priming techniques. Avoid moisture and follow the manufacturer's recommendations.

Properly apply the coating materials (be sure pipe surface is dry - follow manufacturer's recommendations). Make sure soil or other foreign material does not get under coating during installation.

Backfill with material that is free of objects capable of damaging the coating. Severe coating damage can be caused by careless backfilling when rocks and debris strike and break the coating.

COMMON CAUSES OF CORROSION IN GAS PIPING SYSTEMS

Figure VIII-17 Shorted meter set

An example of a galvanic corrosion cell. The tenants of this building have "shorted" out this meter by storing metallic objects on the meter set. Never allow customers or tenants to store material on or near a meter installation.

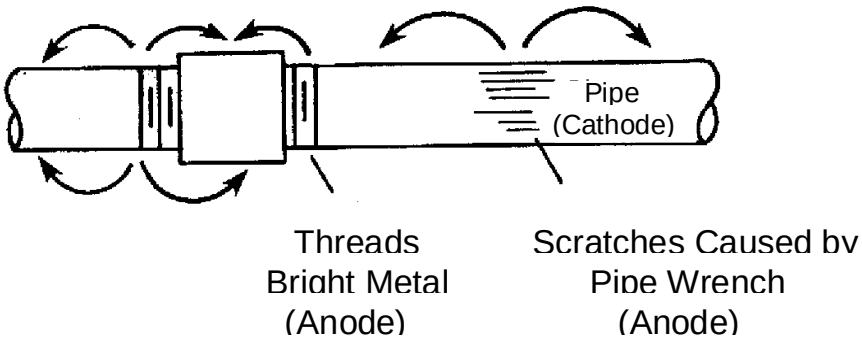

Figure VIII-18 Corrosion caused by dissimilar surface conditions.

This pipe will corrode at the threads or where it is scratched. Remember to repair all cuts or scratches in the coating before burying the pipe. Always coat and/or wrap pipe at all threaded or weld connections before burying the pipe.

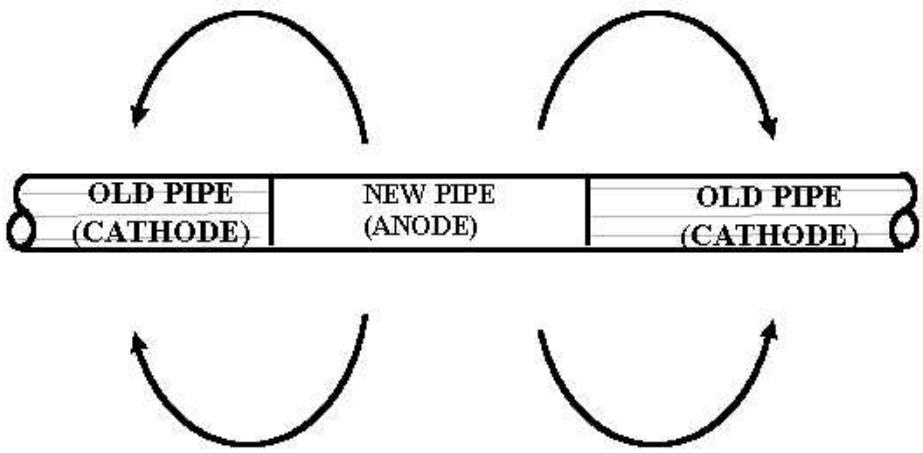

Figure VIII-19 Galvanic Corrosion

Remember, all new steel pipe must be coated and cathodically protected. The new pipe can either be electrically isolated from old pipe or the new and old pipe must be cathodically protected as a unit.

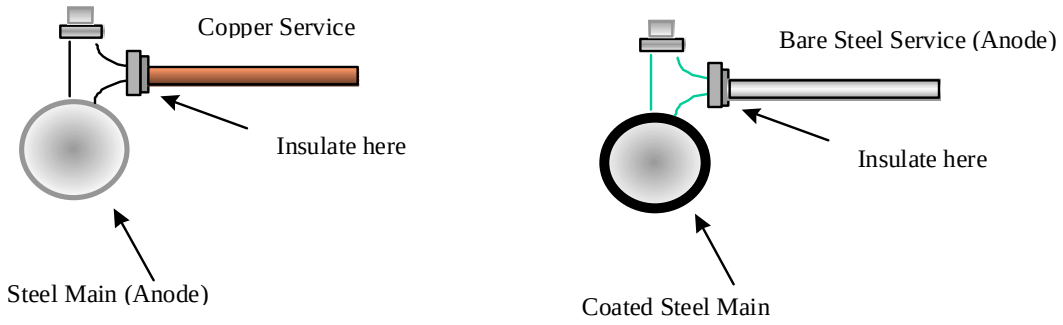

Figure VIII-20 Galvanic Corrosion caused by dissimilar metals.

Steel is above copper in the galvanic series in Table 1 of this chapter. Therefore, steel will be anodic to the copper service. That means the steel pipe will corrode. The copper service should be electrically isolated from the steel main. Remember, steel and cast iron or ductile iron should not be tied in directly. Steel and cast iron should be electrically isolated. Also, coated steel pipe should be electrically isolated from bare steel pipe.

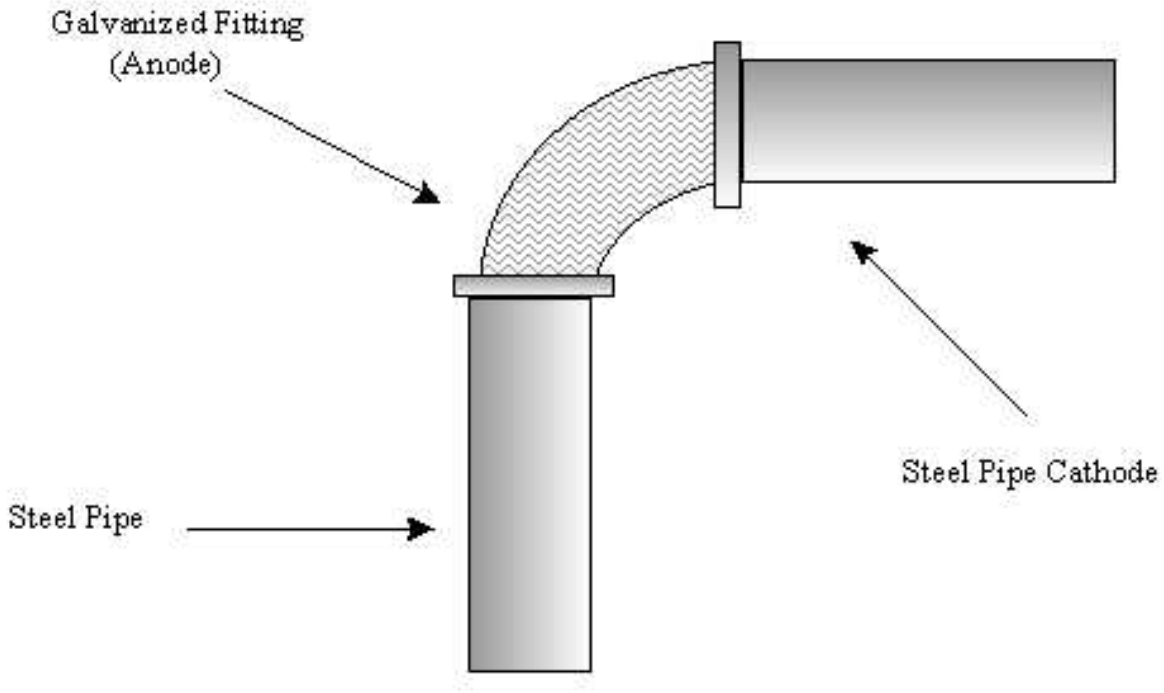

Figure VIII-21 Galvanic Corrosion

The galvanized elbow will act as an anode to steel and will corrode. Do not install galvanized pipe or fittings in a system, if possible. However, when using galvanized fittings, the fittings must be electrically isolated.

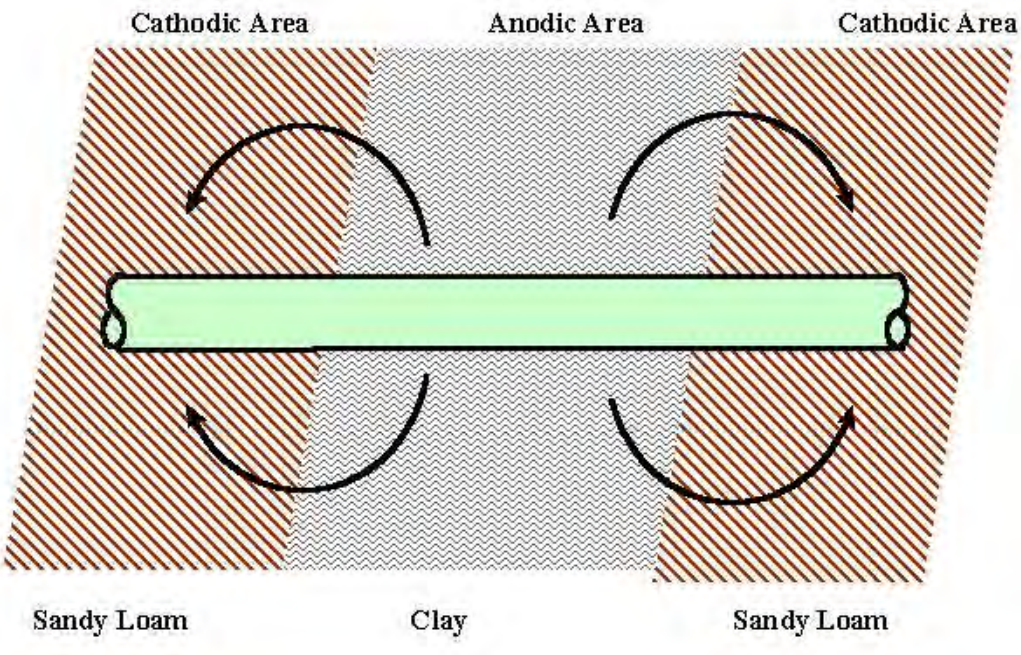

Figure VIII-22 Galvanic Corrosion

A corrosion cell can be set up when pipe is in contact with dissimilar soils. This problem can be avoided by the installation of a well-coated pipe under cathodic protection.

Figure VIII-23 Poor Construction Practice

An example of a main which was buried without a coating or wrapping at the service connection. This corrosion problem could have been avoided with proper coating and cathodic protection.

Figure VIII-24 Atmospheric Corrosion

An example of atmospheric corrosion at a meter riser. This can be prevented by either jacketing the exposed pipe or by keeping it properly painted. Corrosion is usually more severe at the point the pipe comes out of the ground.

CHAPTER IX
LP GAS REGULATORS

BASIC CONCEPTS FOR LP GAS REGULATORS

LP gas regulators reduce container pressure which can range from 8 to 220 psig to intermediate pressures of 10 psig or typical appliance pressure, nominal 11" w.c. They must be installed in accordance with the National Fuel Gas Code NFPA 54, Standard for the Storage and Handling of Liquefied Petroleum Gases Code NFPA 58 and any local requirements.

There are a few terms, units and concepts that are useful when discussing LP gas regulating equipment. These are described as follows:

psig - pounds per square inch gauge. The unit of measure that uses the actual atmospheric pressure as a zero point in a specific geographic area. It is used to describe container pressure and delivery pressure from first-stage and high pressure regulators.

Psig is typically measured with a spring loaded gauge that can be attached to a container outlet connection and downstream of first-stage or high pressure regulators.

w.c. - inches of water column. Unit of measure for delivery pressure from single, second and integral twin stage regulators (27.71"w.c.=1.0 psig). Inches of water column are measured with the use of a U-Tube device called a water manometer (see Figure IX-1) that is filled with water with 1" markings typically up to 16". As pressure is introduced in one side of the tube, the water is forced up the other side; the end reading is then doubled to get the measured delivery pressure.

Inches of water column are typically measured at regulator pressure ports and inlet ports at appliance control valves.

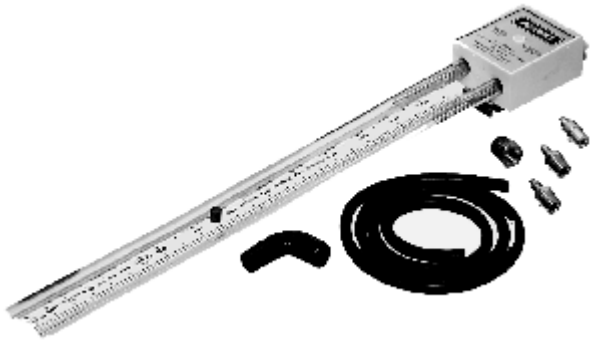

Figure IX-1 Water manometer

Btu - British thermal unit. Measure of heat value. One Btu will raise the temperature ofone pound of water one degree Fahrenheit. Btu is used to describe gas input to an appliance and the capacity of the LP gas regulator. Regulators are rated at the amount of Btu's per hour they can deliver at a specific inlet and outlet pressure. See Figure IX-2.

Set point - a point where the regulator is set for a specific pressure, either psig or inches of water column at a specific inlet pressure and a Btu delivery to downstream appliance(s). See Figure IX-2.

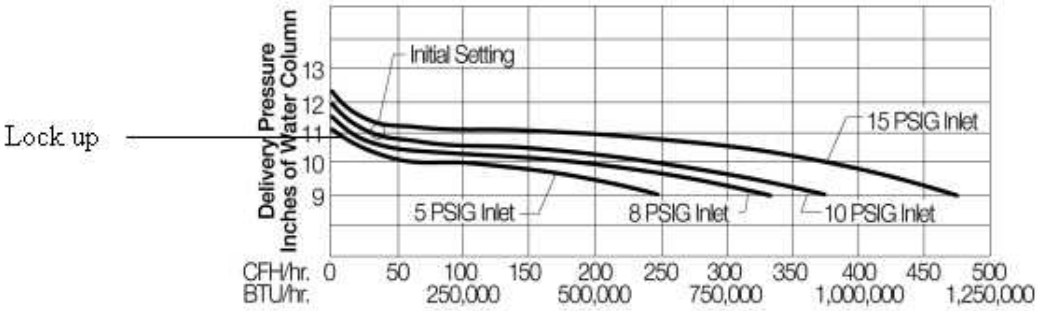

Figure IX-2

Lock up- a point where there is no demand from the appliances and the regulator stops flow. It will always be higher than the set point. On single, second and integral twin stage regulators, it is 120% of the set point, i.e., set point of 10 psig inlet, 11"w.c. at 75,000 Btu/hr is 13.2"w.c. See Figure IX-2.

<u>Components of a Typical Regulator</u>

Figure IX-3 LP regulator

Underwriters Laboratories – Listing - Underwriter Laboratories (UL) is a not-for-profit organization that maintains laboratories for the examination and testing of devices, systems and materials to determine their relation to hazards to life and property. They also publish standards for materials, devices, products, equipment, etc. that affect the above described hazards.

UL-144 is the Standard for LP-Gas Regulators. It defines temperature/pressure ratings, relief valve performance, materials of construction, lock-up ranges, adjustment range, operation/performance and marking requirements to name a few items covered. UL listed regulators conform to the requirements of NFPA 58. Look for the UL mark before installing on a system. On large commercial or industrial systems, UL listed regulators are not always available. The local authority having jurisdiction acts as final approval in these cases.

How a Regulator Works

Typical positive back pressure regulator

Gas enters through the inlet and flows through an orifice **A.** As pressure builds under the diaphragm **B**, which moves upward, the adjustment spring compresses **C** and pushes the seat disc attached to the lever assembly **D** against the inlet nozzle or orifice **A**. If there is no gas demand, the seat disc will stay against the nozzle and gas flow will stop. This is called **lock-up**. When gas demand from the appliance begins, pressure under the diaphragm **B** is reduced, the adjustment spring pushes the lever/seat disc away from the seat and gas flow is allowed through the seat. The diaphragm will continue to sense the pressure under it, and will compress or relax the adjustment spring, which will move the seat lever/seat disc assembly against or away from the seat. This constant movement controls the pressure to downstream regulators or appliances. The design of the adjustment spring determines the pressure setting. See Figure IX-4.

Relief operation

A relief valve is installed in all first, second and integral twin-stage regulators and operates with the requirements of UL-144. It is designed to protect downstream equipment and appliances from overpressure.

When gas enters through orifice **A**, as described above, and downstream demand is reduced or stops, the lever/seat disc **D** will move toward the nozzle to the lock-up position. If the regulator seat disc cannot fully contact the orifice **A**, pressure will continue to build until diaphragm **B** moves up to the point where relief spring **E** begins to compress, allowing gas flow through the relief area into the bonnet and out through the vent **G**. The relief valve will automatically close once the pressure under the diaphragm is reduced to a nominal pressure. See Figure IX-4.

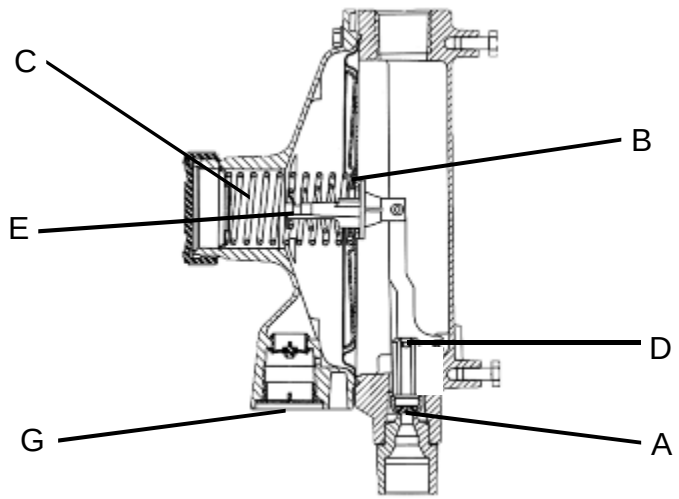

Figure IX-4

There are two designs of LP-gas regulators typically used in systems across the country:

Positive back pressure regulators

This style is a positive back pressure regulator, Figures IX-3 and IX-4**.** It is used as a first stage, second stage, single stage, integral twin-stage and, in some cases, a high pressure regulator. The positive back pressure regulator provides good flow characteristics over a wide range of inlet pressures. LP-Gas vapor pressures change based on temperature. Figure IX-2.

The regulator delivery pressure is affected by the changes in inlet pressure, as well as demand from a downstream appliance(s)**.** The seat disc is on the downstream side of the seat. As inlet pressure rises, the delivery pressure rises; as inlet pressure drops, delivery pressure drops. See Figure IX-2.

Negative direct acting regulators

This style is a negative direct acting regulator. See Figure IX-5**.** It may be used as a high pressure, first stage or even a second stage regulator. The negative acting regulator provides high flow through a large orifice area and a smaller diaphragm area. The seat disc is on the upstream side of the seat. As inlet pressure increases, delivery pressure decreases a small amount; as inlet pressure decreases, delivery pressure increases. The seat disc retainer assembly is directly attached to the stem.

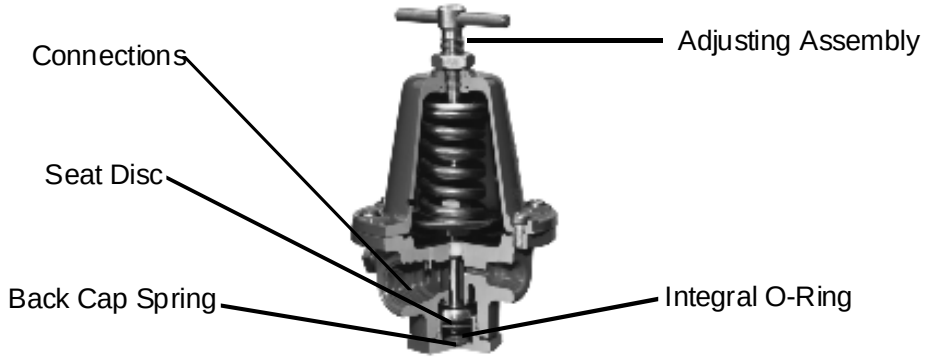

Figure IX-5

TYPES OF REGULATOR SYSTEMS

Regulators and systems control gas pressure from the container to the appliance, reducing the tank pressure which can range from 10-250 psig to the required outlet pressure. There are several types that can range in style and combinations of regulators that can be used to accomplish this task.

Single Stage : One regulator mounted on a container with a line running directly to the appliance(s) (limited to small portable appliances and outdoor cooking appliances with input ratings of 100,000 Btu/hr maximum per NFPA 58, 1995 Edition.) This single regulator is designed for LP gas vapor service to reduce container pressure to 1.0 psig or less (typically 11" water column.) Figure IX-6. These regulators are listed by Underwriters Laboratory or equivalent for use in LP gas with an inlet pressure rating of 250 psig. They utilize a type I relief valve which has a limited capacity; operating range is from 18.7" to 33" w.c.

Per the 1995 Edition of NFPA 58, single stage regulators may no longer be installed on fixed piping systems.

Figure IX-6

First stage : A pressure regulator for LP gas vapor service designed to reduce container pressure to 10 psig or less. It is used as the container regulator in a two stage system. See Figure IX-7A. This regulator can be either of the two styles described above and is UL listed for use as a first stage regulator with an inlet pressure rating of 250 psig. This regulator utilizes a type I relief valve which is a limited capacity; operating range is from 14 psig to 25 psig.

Second Stage : A pressure regulator for LP gas vapor service designed to reduce first stage regulator outlet pressure to 14" water column or less (typically 11" w.c.) See Figure IX-7B. This may be either of the two styles and is UL listed for use in LP gas with an inlet pressure marked at 10 psig, but a rating of 250 psig. This regulator utilizes a type II relief valve - a high capacity type for final stage regulators; operating range is from 18.7" to 33" WC.

Figure IX-7A

Figure IX-7B

High pressure regulator - a pressure regulator for either LP gas vapor or liquid service designed to reduce pressure in excess of 1 psig. The liquid regulating style is usually negative direct acting; the vapor style can be either. Both are usually UL listed with at least a 250 psig inlet pressure rating. This regulator may utilize a type I relief valve or may not. In some cases an additional external relief valve might be required. See NFPA 58 for more information. See Figure IX-5.

Integral two-stage regulator - a pressure regulator that combines both a high pressure and a second stage regulator into a single unit. It is UL listed with a 250 psig inlet pressure rating, no relief in the high pressure section and a type II relief valve in the second stage section. High capacity type for final stage regulators have an operating range from 18.7 inches w.c. to 33 inches w.c. See Figure IX 8.

Figure IX-8

Automatic Changeover : An integral two stage regulator that combines two high pressure regulators and a second stage regulator into a single unit. There are two inlet connections and a service/reserve indicator designed for use with dual- or multiple-cylinder installation. The system automatically changes the LP gas vapor withdrawal from empty designated service cylinder(s) to the designated reserve cylinders, without interruption of service. The service/reserve indicator gives a visual indication of which cylinders are supplying the system. The second stage in an UL listed automatic changeover contains a type II relief valve with the same setting parameters as in the integral twin-stage unit. See Figure IX-9.

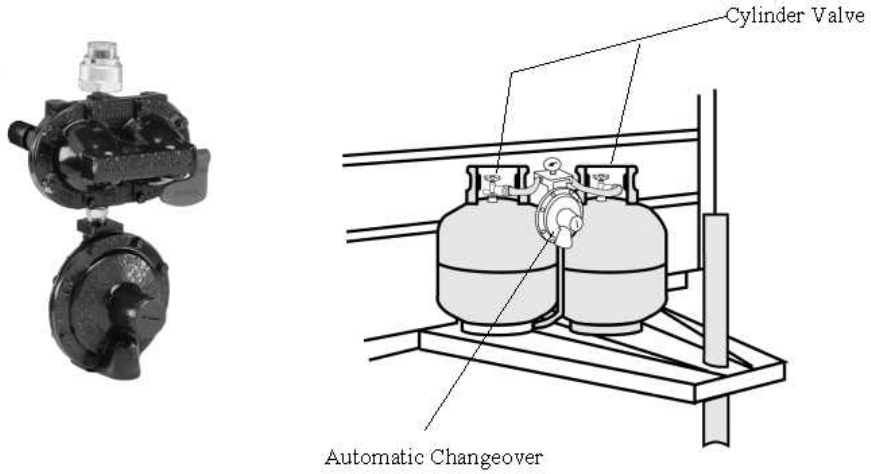

Figure IX-9

Two-Stage Regulator System : An LP gas vapor delivery system that combines a first stage regulator and second stage regulator, Figure IX-10, integral two stage regulator, Figure IX-8, or an automatic changeover regulator Figure IX-9**.**

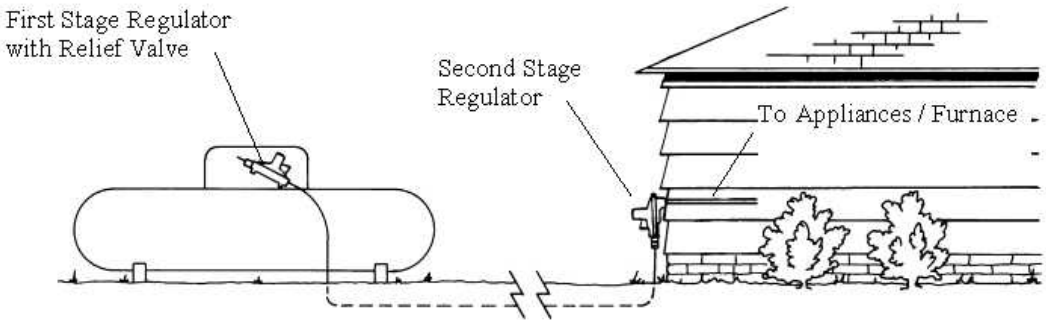

Figure IX-10

Two stage regulator system, Figure IX-11, with a first stage regulator rated at more than 500,000 BTU/HR set at 10 psig or less, with no integral relief valve. In this case the first

stage regulator is permitted to have a separate relief valve. It must operate within specified start-to-discharge limits of UL #144 (140%-200%) of the regulator set pressure.

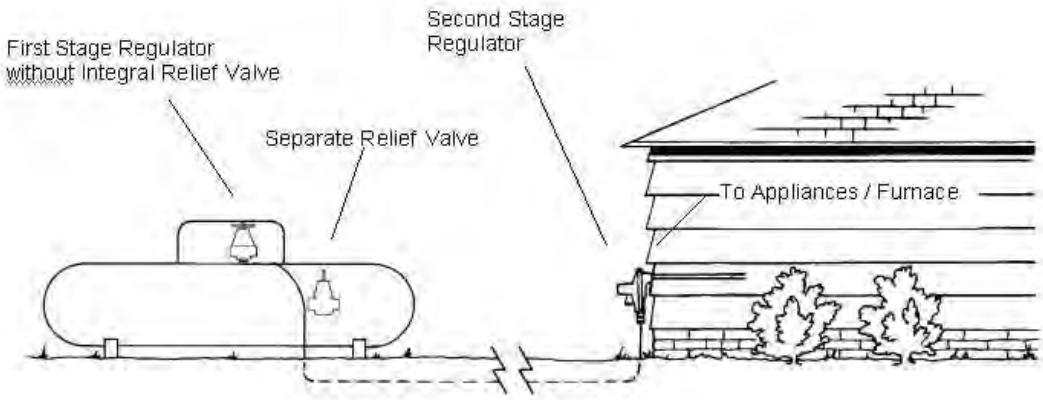

Figure IX-11

Two stage regulator system, Figure IX-12, with a first stage regulator rated at more than 500,000 BTU/HR, set at a pressure higher than 10 psig with no integral relief valve supplying second stage regulator(s). **Note: These systems are usually found where a number of second stage regulators are connected to a single container utilizing one first stage regulator.** In order to comply with NFPA 58 overpressure requirements for second stage regulators, an integral twin-stage regulator can be used for the second stage regulator. This will reduce the higher delivery pressure from the first stage regulator to 10 psig or less. The second stage will supply the required appliance pressure.

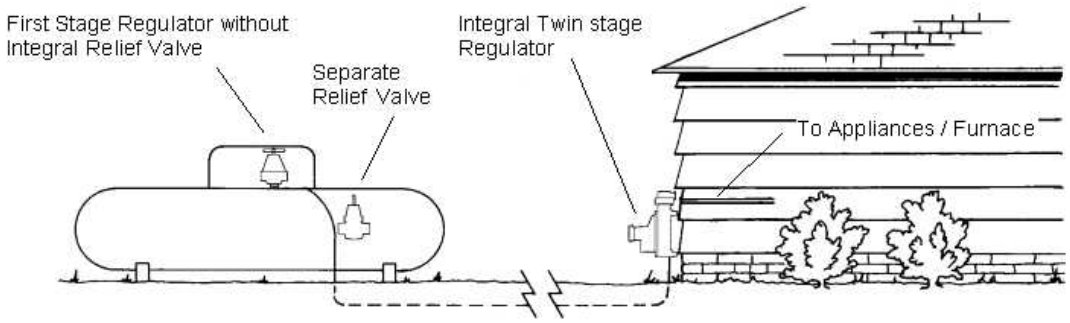

Figure IX-12

REGULATOR SELECTION

1. Determine the total Btu load that the system will require. This can be accomplished by reading the Btu input from each appliance and adding them up. This information can be found on the appliance name plate or from the manufacturers' literature. For example:

Range	65,000 Btu/HR
Water heater	30,000 Btu/HR
Furnace	150,000 Btu/HR
Total	245,000 Btu/HR

2. Determine regulator system type: integral twin stage or two stage? As a general guideline, if the container is going to be over 20 feet from the building, a two stage system is generally used, due to ability to use a smaller line between the first and second stage regulators. When installing containers near or next to the building, integral twin stage are typically used, since this reduced distance does not call for as large a diameter line from the outlet of the integral twin stage regulator. Proper pipe sizing is critical; refer to NFPA 58 1998 edition chapter 11 or the regulator manufacturers' pipe sizing instructions.

3. To select the correct size first stage, second or integral twin stage regulator, refer to the published information in the regulator manufacturers' catalogs. Always select a regulator that meets or exceeds the system demand; if in doubt, go to the next larger size.

In the example of the system requiring 245,000 Btu/HR, selecting a integral twin stage with 300,000 to 500,000 Btu/HR capacity or a first and second stage regulator of 500,000 to 700,000 Btu/HR would be typical.

INSTALLATION

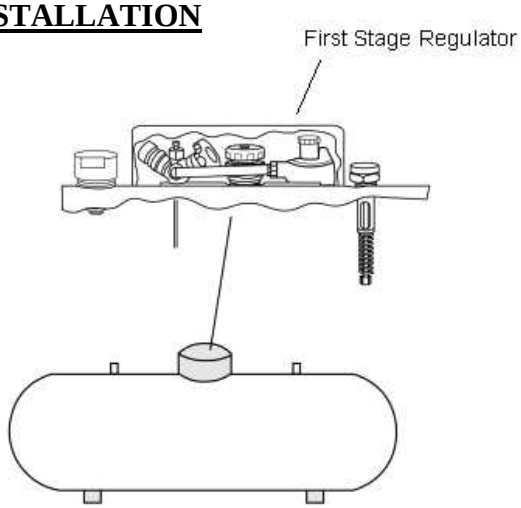

Figure IX-13

LP gas regulators must be installed in conformance with NFPA 54 National Fuel Gas Code, NFPA 58 Liquefied Petroleum Gas Code and any local requirements.

First stage/high pressure/integral twin stage/automatic changeover regulators may not be installed inside buildings unless specifically permitted by NFPA 58, such as certain buildings under construction. When installed outdoors the vent should be down and/or under a protective cover. See Figure IX-13.

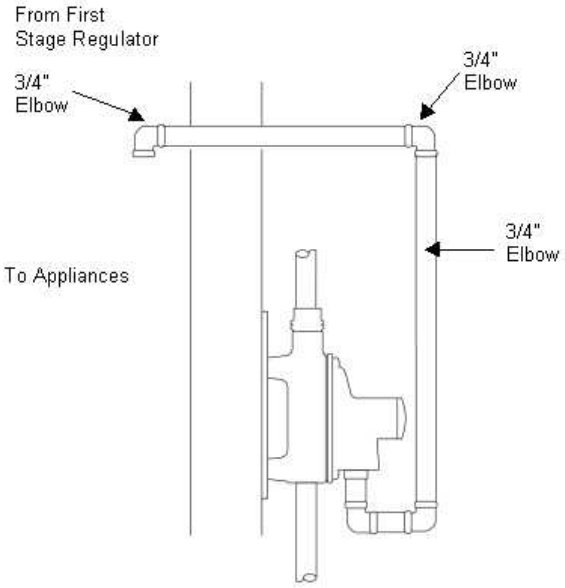

Figure IX-14

Second stage regulators may be installed indoors if the vent is piped to the outside of the building, the vent termination point is down and the outlet is protected by a vent screen, Figure IX-14. When installing second stage regulators outdoors, make sure the vent is pointed down and/or under protective cover. See Figure IX-10.

For more information on LP gas regulator installation, consult the National LP-Gas Association Safety Handbook, the manufacturers' catalogs, servicemen's handbooks, installation instructions and warning information, NFPA 54 and NFPA 58.

CHAPTER X
GAS LEAKAGE CONTROL GUIDELINES FOR PETROLEUM GAS SYSTEMS

SCOPE

These guidelines provide criteria for the detection, grading and control of gas leakage and for related records for systems handling petroleum gases or petroleum gas/air mixtures which are heavier than air.

GENERAL DISCUSSION

A separate set of guidelines for petroleum gas system leakage surveys has been developed because of the differing physical properties of natural gas and petroleum gases.

When considering gas leakage detection and control, the two most significant differences between natural gas and petroleum gas vapor are their specific gravities and flammable limits. The specific gravity of natural gas is approximately 0.6 which is, therefore, lighter than air. This property facilitates the venting and dissipation of natural gas leakage into the atmosphere.

Petroleum gas vapor has a specific gravity range of 1.6 to 2.0 which is heavier than air. Therefore, when petroleum gas vapor escapes, it tends to settle in low places and to move along the bottom of ditch lines and substructures unless dissipated by substantial air movement. It does not readily vent to the surface under normal conditions. When conducting tests for leakage on buried petroleum gas systems, it is essential that samples be taken at or near the pipe, in the bottom of ditch lines and at the low points of substructures.

Hazardous concentrations of petroleum gas can develop rapidly because of the relatively low LEL. The flammable range of natural gas is approximately 5 to 15 percent gas in air compared to 2 to 10 percent gas in air for petroleum gases. When conducting a petroleum gas system leakage survey, it is essential to remember that the lower explosive limit can be as low as 1.9 percent gas in air. It is essential that combustible gas indicator (CGI) instruments used to conduct petroleum gas leakage surveys be properly calibrated. This is especially important when a CGI calibrated for natural gas or methane is used in conjunction with conversion curves for detecting concentrations of other gases. CGI instruments are discussed in more detail later.

DEFINITIONS

Bar hole - a hole that is made in the soil or paving for the specific purpose of testing the subsurface atmosphere with a CGI.

Building - any structure which is normally or occasionally entered by humans for business, residential or other purposes, and in which gas could accumulate.

Combustible gas indicator (CGI) - a device capable of detecting and measuring gas concentrations (of the gas being transported) in the atmosphere.

Confined space - any subsurface structure (such as vaults, catch basins or manholes) of sufficient size to accommodate a person, and in which gas could accumulate

TABLE 1 -- SIGNIFICANT PHYSICAL PROPERTIES OF FOUR TYPICAL HYDROCARBON GASES NORMALLY FOUND IN DISTRIBUTION PIPELINE SYSTEMS [1]

	Natural Gas	Propane	Propane/Air 40/60%	Butane
Formula	Blend	C_3H_8	C_3H_8/Air	C_4H_{10}
Normal State at atmospheric pressure at 60° F	Gas	Gas	Gas	Gas
Specific Gravity (Air = 1)	0.6	1.6	1.2	2.0
Flammability Limits				
Lower Limit % Gas in Air	5	2	[2]	2
Upper Limit % Gas in Air	15	10	[2]	9

1. Other mixtures may have significantly different physical properties. Each operator should evaluate the gas in his distribution system and react accordingly.
2. The explosive limits refer to percent gas in air and are the same shown for propane.

Follow-up inspection - an inspection performed after a repair has been completed to determine the effectiveness of the repair.

Gas associated substructure - a device or facility utilized by a gas company (such as a valve box, vault, test box or vented casing pipe) which is not intended for storing, transmitting or distributing gas.

L.E.L. - the lower explosive limit of the gas being transported.

Natural gas - a blend of gases that is primarily methane and is lighter than air.

Petroleum gas - propane, butane or mixtures of these gases (other than a gas air mixture that is used to supplement supplies in a natural gas distribution system) that is heavier than air.

Permanent test point - a selected sample point which has been installed to maintain an opening for testing the subsurface atmosphere over or adjacent to the gas facility. Curb boxes, vents or test inserts are normally used for this purpose.

Prompt-action - dispatching qualified personnel without delay for the purpose of evaluating and, where necessary, abating the existing or probable hazard.

Reading - a repeatable deviation on a CGI or equivalent instrument expressed in LEL. Where the reading is in an un-vented confined space, consideration should be given to the rate of dissipation when the space is ventilated and the rate of accumulation when the space is resealed.

Small substructures (other than gas associated substructures) - any subsurface structures that are of insufficient size to accommodate a person (such as telephone and electrical ducts and conduit or non-gas-associated valve and meter boxes) and in which gas could accumulate or migrate.

Tunnel - a subsurface passageway large enough for a person to enter and in which gas could accumulate.

LEAKAGE DETECTION

Qualification of personnel

Gas leakage surveys should be performed by personnel who are qualified by training and experience in the type of survey being performed. They should be thoroughly familiar with the characteristics of the petroleum gas in the system and trained in the use of leakage detection instruments.

Reports from outside sources

Any notification from an outside source (such as police or fire department, other utility, contractor, customer or general public) reporting an odor, leak, explosion or fire which may involve gas pipelines or other gas facilities should be investigated promptly. If the investigation reveals a leak, the leak should be graded and action should be taken in accordance with these guidelines.

Odors or indications from foreign sources

When leak indications (such as gasoline vapors, natural, petroleum, sewer or marsh gas) are found to originate from a foreign source or facility or customer owned piping, prompt actions should be taken where necessary to protect life and property. Potentially hazardous leaks should be reported promptly to the operator of the facility and, where appropriate, to the police department, fire department or other governmental agency. When the company's pipeline is connected to a foreign facility (such as the customer's piping), necessary action (such as disconnecting or shutting off the flow of gas to the facility) should be taken to eliminate the potential hazard.

Leakage surveys and test methods

For leakage surveys, see the limitations under §§192.706 and 192.723 regarding leak detection equipment. The following gas leakage surveys and test methods may be employed, as applicable, in accordance with written procedures.

- Subsurface gas detector survey (including bar hole surveys)
- Bubble leakage test
- Pressure drop test
- Ultrasonic leakage test

Other survey and test methods may be employed if they are deemed appropriate and are conducted in accordance with procedures which have been tested and proven to be at least equal to the methods listed in this section.

The surface gas detection survey and vegetation survey methods used for natural gas systems are not recommended for use on petroleum gas systems. Petroleum gases are heavier than air and will frequently not come to the ground surface or cause surface indications in the vegetation. However, the surface gas detection survey, when properly conducted by taking into account that the gas is heavier than air, may be used adjacent to aboveground facilities.

(a) Subsurface gas detection survey

(1) Definition. The sampling of the subsurface atmosphere with a combustible gas indicator or other device capable of detecting 10 percent of the LEL at the sample point.

(2) Procedure. The survey should be conducted by performing tests with a series of bar holes immediately adjacent to the gas facility and in available openings (confined spaces and small substructures) adjacent to the gas facility. The location of the gas facility and its proximity to buildings and other structures should be considered when determining the spacing of sample points. Spacing of sample points along the main or pipeline will depend on soil and surface conditions but should never be more than 20 feet apart. Where the facility passes under paving for a distance of 20 feet or less, tests should be made at the entrance and exit points of the paved area. Where the paved area over the facility is 20 feet or greater in length, sample points should be located at intervals of 20 feet or less. In the case of extensive paving, permanent test points should be considered, particularly in low places. The sampling pattern should include tests at potential leak locations such as threaded or mechanical joints and at building walls at the service riser or service line entrance. All available openings adjacent to the facility should be tested.

When testing available openings for petroleum gas, readings should be taken at both the top and bottom of the structure. When testing larger confined spaces or basements, the floor areas including floor drains should be thoroughly tested because petroleum gases can lie temporarily in pockets containing explosive mixtures. Since migrating gas may not enter at the pipeline entrance, a perimeter survey of the floors and walls is recommended. When conducting the survey, all bar holes should penetrate to the pipe depth, where necessary, in order to obtain consistent and worthwhile readings. This includes penetrating through capping materials such as paving, concrete, frost or surface sealing by ice or water. The required depth of the bar hole will also depend upon the soil conditions, the depth of and pressure in the pipeline and the type of instrument being used. The readings should be taken at the bottom of the bar hole. The probe used should be equipped with a device to preclude the drawing in of fluids. When conducting the survey, the inspector should use the most sensitive scale on the instrument, watching for small indications of combustible gas. Any indication should be further investigated to determine the source of the gas. Care should be taken to avoid damaging the pipe or coating with the probe bar.

(3) Utilization. This survey method should be utilized for buried facilities. Good judgment should be used to determine when the recommended spacing of sample points is inadequate. Additional sample points should be provided under these conditions. Available openings (such as manholes, vaults and valve boxes) should be tested. However, they should not be relied upon as the only points used to test for petroleum gas leakage.

(b) Bubble leakage test

(1) Definition. The application of a soap-water or other bubble forming solutions on exposed piping to determine the existence of a leak.

(2) Procedure. The exposed piping systems should be reasonably cleaned and completely coated with the solution. Leaks are indicated by the presence of bubbles. The bubble forming solution should not be used on piping unless it has been determined by investigation or test that the piping is adequately resistant to direct contact with the solution.

(3) Utilization. This test method may be used for the following:

(i) Testing exposed aboveground portions of a system (such as meter set assemblies or exposed piping on bridge crossings).
(ii) Testing a tie-in joint or leak repair which is not included in a pressure test.

(c) Pressure drop test

(1) Definition. A test to determine if an isolated segment of pipeline loses pressure due to leakage.

(2) Procedure. Facilities selected for pressure drop tests should first be isolated and then tested. The following criteria should be considered in determining test parameters:

(i) Test pressure. A test conducted on existing facilities solely for the purpose of detecting leakage should be performed at a pressure at least equal to the operating pressure. A pressure test conducted for the purpose of line qualification or uprating must be performed in accordance with the requirements of Subparts J or K of the Federal Safety Standards.

(ii) Test medium. The test medium used must comply with the requirements of §192.503(b) of the Federal Safety Standards.

(iii) Test duration. The duration of the test should be of sufficient length to detect leakage. The following should be considered in the determination of the duration:

- The volume under test.
- The time required for the test medium to become temperature stabilized.
- The sensitivity of the test instrument.

(3) Utilization. Pressure drop tests should be used only to establish the pressure or absence of a leak on a specifically isolated segment of a pipeline. Normally, this type of test will not provide a leak location. Therefore, facilities on which leakage is indicated may require further evaluation by another detection method in order that the leak may be located, evaluated and graded.

(d) Ultrasonic leakage test

(1) Definition. The testing of exposed piping facilities with an instrument capable of detecting the ultrasonic energy generated by escaping gas. The instrument used should be suitable for the pressure involved.

(2) Procedure. In the testing of a gas facility by this method, the following should be considered.

(i) Line pressure. As the line pressure increases, the magnitude of the ultrasonic energy generated by a leak increases.

(ii) Location of facility. Objects near or surrounding a facility being tested may reflect or attenuate the ultrasonic energy generated, making it difficult to detect or pinpoint the leak.

(iii) Leak frequency. A number of leaks in a given area can create a high ultrasonic background level which may reduce the detection capabilities of this type of test.

(iv) Type of facility. Pneumatic and gas operated equipment generate ultrasonic energy. The location and amount of this type of equipment should be known to determine if the ultrasonic background is too high. Personnel conducting this type of test should scan the entire area to eliminate the tracking of reflected indications. Ultrasonic indications of leakage should be verified or pinpointed by one of the other acceptable survey or test methods.

(3) Utilization. The ultrasonic test may be used for testing of exposed piping facilities. However, if the ultrasonic background level produces a full scale meter reading when the gain is set at mid-range, the facility should be tested by some other survey method.

Typically available instruments for the detection of gas

(a) Type and general usage. See Table 2

(b) Maintenance of instruments

Each instrument utilized for leak detection and evaluation should be operated in accordance with the manufacturer's recommended operating instructions and:

(1) Should be periodically "checked" while in use to ensure that the recommended voltage requirements are available.

(2) Should be tested daily or prior to use to ensure proper operation, to ensure that the sampling system is free of leakage and to ensure that the filters are not obstructing the sample flow.

(3) Hydrogen flame ionization (HFI) systems should be tested at each start-up and periodically tested during a survey.

(c) Calibration of instruments

Each instrument utilized for leak detection and evaluation should be calibrated in accordance with the manufacturer's recommended calibration instructions:

(1) After any repair or replacement of parts.

(2) On a regular schedule giving consideration to the type and usage of the instrument involved. HFI and CGI instruments should be checked for calibration at least once each month while in use.

(3) At any time it is suspected that the instrument's calibration has changed.

TABLE 2 - TYPE AND GENERAL USAGE [1]

Instrument Type	Lower Sensitivity Level			Upper Sensitivity Level			Sampling
Subsurface Survey	**PPM_2**	**%LEL**	**%Gas**	**PPM_2**	**%LEL**	**%Gas**	**Method**
Catalytic Type[3] (Hotwire % LEL)	2,000	10	0.2	20,000	100	23	Hand aspirated
Thermal Conductivity (% Gas)	50,000	5.0				100	Hand aspirated
Amplified Thermal Conductivity	50		1			253	Pump
Infrared Detector	5			1,000	2	0.1	Pump
Hydrogen Flame[4] Ionization Detector	1			10,000 to 50,000	20 to 100	1 to 5	Pump

1. The PPM percent LEL and percent gas values shown are for propane concentrations on instruments calibrated for propane. Where other liquefied petroleum gases or manufactured gas are involved, appropriate adjustment should be made to be commensurate with the criteria of these procedures.
2. PPM - Parts per million
3. When the maximum concentration detectable is exceeded, the needle of this instrument meter will drop to zero.
4. Upper sensitivity level varies with different models.

(d) Conversion curves

It is not absolutely essential that instruments used to conduct petroleum gas system leakage surveys be calibrated specifically for the gas being distributed. However, it is essential that the instrument be properly calibrated for the gas specified by the manufacturer and that conversion curves for the appropriate petroleum gas be obtained from the manufacturer or be developed by the operator. Without proper calibration and the appropriate conversion curves the inspector cannot interpret meter readings or determine concentrations. For example, hotwire CGI instruments calibrated for methane or natural gas will read true for propane on the LEL scale (2.0 percent propane in air will read 100 percent LEL on the meter). On dual scale instruments calibrated for natural gas, a 100 percent propane concentration will not read 100 percent gas.

LEAKAGE CLASSIFICATION AND ACTION CRITERIA

General

The following establishes a procedure by which leakage indications of flammable petroleum gas can be graded and controlled. When evaluating any petroleum gas leak indication, the initial step is to determine the perimeter of the leak area. When this perimeter extends to a building wall, the investigation should continue into the building. Where petroleum gas is involved, special attention should be given to the basement or other low areas.

Leak grades

Based on an evaluation of the location and/or magnitude of a leak, one of the following leak grades should be assigned, thereby establishing the leak repair priority.

- Grade 1 - a leak that represents an existing or probable hazard to persons or property and requires immediate repair or continuous action until the conditions are no longer hazardous.
- Grade 2 - a leak that is recognized as being non-hazardous at the time of detection, but requires scheduled repair based on probable future hazard.
- Grade 3 - a leak that is non-hazardous at the time of detection and can be reasonably expected to remain non-hazardous. Because petroleum gas is heavier than air and will collect in low areas instead of dissipating, few leaks can safely be classified as Grade 3.

Leak classification and action criteria

Guidelines for leak classification and leakage control are provided in Tables 3a, 3b and 3c. The examples of leak conditions provided in the tables are presented as guidelines and are not exclusive. The judgment of the company personnel at the scene is of primary importance in determining the grade assigned to a leak.

Follow-up Inspection

The adequacy of leak repairs should be checked before backfilling. The perimeter of the leak area should be checked with the CGI. Where there is residual gas in the ground after the repair of a Grade 1 leak, follow-up inspections should be made as soon as practical after allowing the soil atmosphere to vent and stabilize, but in no case later than one month following the repair. Since petroleum gases are heavier than air, it is usually necessary to purge or mechanically vent an area one or more times to ensure that a hazardous condition no longer exists. In the case of other repairs, the need for a follow-up inspection should be determined by qualified personnel and when a follow-up inspection is needed, it should be made as soon as practical but in no case later than three months.

Reevaluation of a leak

When a leak is to be reevaluated (see Tables 3b and 3c), it should be classified using the same criteria as when the leak was first discovered.

TABLE 3a - LEAK CLASSIFICATION AND ACTION CRITERIA - GRADE 1

GRADE 1

DEFINITION

A leak that represents an existing or probable hazard to persons or property and requires immediate repair or continuous action until the conditions are no longer hazardous.

ACTION CRITERIA

Requires prompt action to protect life and property. The prompt action in some instances may require one or more of the following:

1. Implementation of company emergency plan (§192.615)
2. Evacuating premises
3. Blocking off an area
4. Rerouting traffic
5. Eliminating sources of ignition
6. Venting the area
7. Stopping the flow of gas by closing valves or other means
8. Notifying police and fire departments

EXAMPLES

1. Any leak which, in the judgment of operating personnel at the scene is regarded as an immediate hazard
2. Escaping gas that has ignited
3. Any indication of gas which has migrated into or under a building or into a tunnel
4. Any reading at the outside wall of a building or where gas would likely migrate to an outside wall of a building
5. Any reading of 80% LEL or greater in a confined space
6. Any reading of 80% LEL or greater in small substructures (other than gas associated substructures) from which gas would likely migrate to the outside wall of a building
7. Any leak that can be seen, heard or felt and which is in a location that may endanger the general public or property

TABLE 3b - LEAK CLASSIFICATION AND ACTION CRITERIA - GRADE 2

GRADE 2

DEFINITION

A leak that is recognized as being non-hazardous at the time of detection but justifies scheduled repair based on probable future hazard.

ACTION CRITERIA

Leaks should be repaired or cleared within one calendar year but no later than 15 months from the date the leak was reported. In determining the repair priority, criteria such as the following should be considered:

1. Amount and migration of gas
2. Proximity of gas to buildings and subsurface elements
3. Extent of pavement
4. Soil type and soil conditions such as frost cap, moisture and natural venting

Grade 2 leaks should be reevaluated at least every six months until cleared. The frequency of reevaluation should be determined by the location and magnitude of the leakage condition.

Grade 2 leaks may vary greatly in degree of potential hazard. Some Grade 2 leaks, when evaluated by the above criteria, may justify scheduled repair within the next five working days. During the working day on which the leak is discovered, these situations should be brought to the attention of the individual responsible for scheduling leak repairs.

Many Grade 2 leaks, because of their location and magnitude, can be scheduled for repair on a normal routine basis with periodic re-inspection as necessary.

EXAMPLES

A. Leaks Requiring Action Ahead of Ground Freezing or Other Adverse Changes in Venting Conditions -

Any leak which, under frozen or other adverse soil conditions, would likely migrate to the outside wall of a building.

B. Leaks Requiring Action Within Six Months -

1. Any reading of 40% LEL, or greater, under a sidewalk in a wall-to-wall paved area that does not qualify as a Grade 1 leak

2. Any reading of 100% LEL, or greater, under a street in a wall-to-wall paved area that has significant gas migration and does not qualify as a Grade 1 leak
3. Any reading less than 80% LEL in small substructures (other than gas associated substructures) from which gas would likely migrate creating a probable future hazard
4. Any reading between 20% LEL and 80% LEL in a confined space
5. Any reading on a pipeline operating at 30 percent SMYS, or greater, in a class 3 or 4 location which does not qualify as a Grade 1 leak
6. Any reading of 80% LEL, or greater, in gas associated substructures
7. Any leak which, in the judgment of operating personnel at the scene, is of sufficient magnitude to justify scheduled repair

TABLE 3c - LEAK CLASSIFICATION AND ACTION CRITERIA - GRADE 3

GRADE 3

DEFINITION

A leak that is non-hazardous at the time of detection and can be reasonably expected to remain non-hazardous.

ACTION CRITERIA

These leaks should be reevaluated during the next scheduled survey, or within 15 months of the date reported, whichever occurs first, until the leak is re-graded or no longer results in a reading.

EXAMPLES

Leaks requiring reevaluation at periodic intervals -

1. Any reading of less than 80% LEL in small gas associated substructures
2. Any reading under a street in areas without wall-to-wall paving where it is unlikely the gas could migrate to the outside wall of a building
3. Any reading of less than 20% LEL in a confined space

RECORDS AND SELF AUDIT GUIDELINES

Leak records

Historical gas leak records should be maintained. Sufficient data should be available to provide the information needed to complete the Department of Transportation Leak

Report Forms DOT F-7100.1, DOT F-7100.1-1, DOT F-7100.2 and DOT F-7100.2-1 and to demonstrate the adequacy of company maintenance programs.

The following data should be recorded and maintained, but need not be in any specific format or retained at one location. Time of day and environmental description records are required only for those leaks which are reported by an outside source or require reporting to a regulatory agency.

(a) Date discovered, time reported, time dispatched, time investigated and by whom
(b) Date repaired, time repaired and by whom
(c) Date(s) rechecked after repair and by whom
(d) If a reportable leak, date and time of telephone report to regulatory authority and by whom
(e) Location of leak
(f) Leak grade
(g) Line use (distribution, transmission, etc.)
(h) Method of leak detection (if reported by outside party, list name and address)
(i) Part of system where leak occurred (main, service, etc.)
(j) Part of system which leaked (pipe, valve, fitting, regulator station, etc.)
(k) Material which leaked (steel, plastic, etc.)
(l) Origin of leak
(m) Pipe description
(n) Type repair
(o) Leak cause
(p) Date pipe installed (if known)
(q) Under cathodic protection? (Yes - No)
(r) Magnitude of CGI indication

<u>Leak survey records</u>

For the current and immediately previous survey of an area, the following information should be available.

(a) Description of system and area surveyed. (This could include maps and/or leak survey logs.)
(b) Survey results
(c) Survey method
(d) Names of those making survey
(e) Survey dates
(f) In addition to the above, the following records should be kept for a pressure drop test.
    (1) The name of the operator, the name of the operator's employee responsible for making the test and the name of any test company used

(2) Test medium used
(3) Test pressure
(4) Test duration
(5) Pressure recording charts or other record of pressure readings
(6) Test results

Self audits

To evaluate the effectiveness of the leak detection and repair program, self audits should be performed on the following:

(a) Schedule of leakage survey. The operator should ensure that the schedule is commensurate with Subpart M of the federal safety standards and the general condition of the pipeline system.
(b) Survey effectiveness. The operator should evaluate leakage survey results to assure that throughout the system a consistent evaluation is being made.
(c) Repair scheduling. The operator should ensure that repairs are made within the time specified.
(d) Repair effectiveness. The operator should ensure that leak repairs are effective.
(e) Leak records. The operator should ensure that adequate records are being maintained.

PINPOINTING

Scope

Pinpointing is the process of tracing a detected gas leak to its source. It should follow an orderly systematic process which uses one or more of the following procedures to minimize excavation. The objective is to prevent unnecessary excavation which is more time consuming and costly than time spent pinpointing a leak.

Procedure

(a) The migration of gas should be determined by establishing the outer boundaries of the indications. This will define the area in which the leak will normally be located. These tests should be made with a CGI without expending excessive effort providing sample points.
(b) All gas lines should be located to narrow the area of search. Particular attention should be paid to the location of valves, fittings, tees, stubs and connections, the latter having a relatively high probability of leakage. Caution should be exercised to prevent damage to other underground structures during bar holing or excavating.
(c) Foreign facilities in the area of search should be identified. The operator should look for evidence of recent construction activities which could

have contributed to the leakage. Gas may also migrate and vent along a trench provided for other facilities.

(d) Evenly spaced bar or test holes should be used over the gas line suspected to be leaking. All bar holes should be of equal depth and diameter (and down to the pipe depth where necessary) and all CGI readings should be taken at an equal depth in order to obtain consistent and worthwhile readings. Using only the highest sustained readings, the gas can be traced to its source by identifying the test holes with the highest readings.

(e) Frequently, high readings are found in more than one bar hole and additional techniques are necessary to determine which reading is closest to the probable source. Many of the bar hole readings will normally decline over a period of time but it may be desirable to dissipate excess gas from the underground locations to hasten this process. Evaluation methods should be used with caution to avoid distorting the venting patterns.

(f) Once underground leakage has been identified, additional holes and deeper holes should be probed to more closely bracket the area. (For example, test holes may be spaced six feet apart initially and then the six foot spacing between the two highest holes might be probed with additional test holes, with spacing as close as twelve inches.)

(g) Additional tests include taking CGI readings at the top of a bar hole or using manometer or bubble forming solutions to determine which bar hole has the greatest positive flow. Other indications are dust particles blowing from the bar holes, the sound of gas coming from the bar hole or the feel of gas flow on a sensitive skin surface. On occasion, sunlight diffraction can be observed as the gas vents to the atmosphere.

(h) When gas is found in an underground conduit, testing at available openings may be used to isolate the source in addition to the techniques previously mentioned. Many times the leak is found at the intersection of the foreign conduit and the gas line. Particular attention should be given to these locations.

(i) When the pattern of the CGI readings has stabilized, the bar hole with the highest reading will usually pinpoint the gas leak.

(j) The operator should test with bubble forming solution where piping has been exposed, particularly to locate smaller leaks.

Precautions

(a) Unusual situations may complicate these techniques on some occasions. They are unlikely, but possible. For example, multiple leakage can be occurring which gives confusing data. The area should be rechecked after repairs are completed to eliminate this potential. Gas may occasionally pocket and give a strong indication until the cavity has been vented. Foreign gases, such as gas from decomposed material, can occasionally be encountered. This is characterized by fairly constant CGI readings between 15 percent and 30 percent gas throughout the area. Indications of

gas detected in sewer systems should be considered migrating gas leakage until proven otherwise by test or analysis.

(b) When pinpointing leakage where the gas is heavier than air (LP gas), the gas will normally stay low near the pipe level but may flow downhill. LP gases usually do not diffuse or migrate widely so the leak is generally close to the indication. If the gas is venting into a duct or sewer system, it can travel considerable distance.

APPENDIX A

Contacts

APPENDIX A

DEPARTMENT OF TRANSPORTATION
RESEARCH AND SPECIAL PROGRAMS ADMINISTRATION
OFFICE OF PIPELINE SAFETY

Eastern Region William H. Gute, Director DPS-24 400 Seventh St., SW Room 2108 Washington, DC 20590 (202) 366-4580	**Southwest Region** Rodrick Seeley, Director DPS-27 2320 LaBranch, Suite 2116 Houston, TX 77004 (713) 718-3955
New Jersey District Office *Byron Coy (609) 989-2180* ***Maine District Office*** *Chuck Behounek (207) 926-5929* ***Pittsburgh District Office*** *Mike Yazemboski (724) 898-3705*	***Louisiana District Office*** *Bill Bertges (225) 757-7642*
Southern Region Frederick Joyner, Director DPS-25 61 Forsyth St., Suite 16T15 Atlanta, GA 30303-3104 (404) 562-3533	**Western Region** Chris Hoidal, Director DPS-28 12600 W. Colfax Ave. Suite A-250 Lakewood, CO 80215-3736 (303) 231-5706
Central Region Ivan A. Huntoon, Director DPS-26 1100 Main St., RM 1120 Kansas City, MO 64105 (816) 329-3829	***Alaska District Office*** *Jon Strawn (907) 271-6519* ***Washington State District Office*** *Steve Rieger (360) 273-0934*
Chicago District Office *Carl Griffis (219) 661-8586*	**Transportation Safety Institute** Richard E. Sanders, Manager Pipeline Safety Division, DTI-60 P.O. Box 25082 Oklahoma City, OK 73125-0082 (405) 954-7219

STATE PIPELINE SAFETY PROGRAM MANAGERS

Eastern Region

Phil Sher
Connecticut Dept. of Public Utility Control
One Central Park Plaza
New Britain, CT 06051
Phone: (860) 827-2604

Adesina F. Jaiyeola
District of Columbia Public Service Comm.
717 14th Street, NW, Suite 200
Washington, DC 20005
Phone: (202) 626-9215

Alex J. Dankanich
Maryland Public Service Commission
6 St. Paul Center
Baltimore, MD 21202-6806
Phone: (410) 767-8082

Richard G. Marini
New Hampshire Public Utilities Comm.
8 Old Suncook Road
Concord, NH 03301-2431
Phone: (603) 271-2431

John E. Gawronski
New York Public Service Commission
#3 Empire State Plaza
Albany, NY 12223
Phone: (518) 486-2648

James Lanni
Rhode Island Division of Public Utilities
100 Orange Street
Providence, RI 02903-2803
Phone: (401) 222-3500

Malak Michael
Delaware Public Service Commission
861 Silver Lake Blvd., Suite 100
Dover, DE 19904
Phone: (302) 739-2613

Gary Farmer
Maine Public Utilities Commission
242 State Street
State House Station 18
Augusta, ME 04333-0018
Phone: (207) 287-1385

Robert F. Smallcomb
Massachusetts Dept. of Telecom & Energy
One South Station
Boston, MA 02110
Phone: (617) 305-3537

David McMillan
New Jersey Board of Public Utilities
Two Gateway Center
Newark, NJ 07102
Phone: (973) 648-2204

Joseph T. Finnan
Pennsylvania Public Utility Commission
Barto Bldg., 3rd Floor
231 State Street, PO Box 3265
Harrisburg, PA 17105-3265
Phone: (717) 787-1061

Kenneth W. Wood
Vermont Department of Public Services
State Office Bldg.
120 State Street
Montpelier, VT 05620-2601
Phone: (802) 828-4073

Massoud Tahamtani
Division of Energy Regulation
Virginia State Corporation Commission
PO Box 1197
Richmond, VA 23218
Phone: (804) 371-9264

Darrell A. McKown
Public Service Comm. of West Virginia
201 Brooks Street
PO Box 812
Charlston, WV 25323-0812
Phone: (304) 340-0473

Southern Region

Chris J. Harvey
Alabama Public Service Commission
PO Box 991
Montgomery, AL 36101-0991
Phone: (334) 242-5778

Don E. Martin
Arkansas Public Service Commission
1000 Center, Box 400
Little Rock AR 72203-0400
Phone: (501) 682-5705

Vicki O'Neil
Bureau of LP Gas Inspection
Florida Dept. of Agriculture and Consumer Services
3125 Conner Blvd., Suite N
Tallahassee, FL 32399-1650
Phone: (850) 921-8001

C. Edward Mills
Florida Public Service Commission
2540 Shumard Oak Blvd.
Tallahassee, FL 32399-0868
Phone: (850) 413-6700

Danny L. McGriff
Georgia Public Service Commission
47 Trinity Avenue, SW
Atlanta, GA 30334
Phone: (404) 463-6526

Eddie B. Smith
Kentucky Public Service Commission
730 Schenkel Lane
PO Box 615
Frankfort, KY 40602
Phone: (502) 564-3940 X425

Ricky L. Cotton
Mississippi Public Service Commission
550 High Street
Walter Sillers Bldg., Room 1920
Jackson, MS 39215-1174
Phone: (601) 961-5475 or 5485

James D. Anderson
North Carolina Utilities Commission
430 North Salisbury Street, Dobbs Bldg.
PO Box 29510
Raleigh, NC 27626-0510
Phone: (919) 733-1249

Leticia Santos
Puerto Rico Public Service Commission
PO Box 870
San Juan, PR 00919-0870
Phone: (787) 756-1448

Vernon Gainey
South Carolina Public Service Commission
PO Drawer 11649
Columbia, SC 29211
Phone: (803) 896-5193

Glynn Blanton
Tennessee Regulatory Authority
460 James Robertson Parkway
Nashville, TN 37243-0505
Phone: (615) 741-2844 X185

Central Region

Steve Smock
Illinois Commerce Commission
527 East Capitol Avenue
PO Box 19280
Springfield, IL 62794-9280
Phone: (217) 785-1165

Donald J. Stursma
Iowa Utilities Board
350 Maple Street
Des Moines, IA 50319-0069
(515) 281-5546

Paul Proudfoot
Michigan Public Service Commission
6545 Mercantile Way
PO Box 30221
Lansing, MI 48909
(517) 334-7228

Robert R. Leonberger
Missouri Public Service Commission
Truman State Office Building, Room 530
PO Box 360
Jefferson City, MO 65102
(573) 751-3456

Alan G. Moch
North Dakota Public Service Commission
State Capitol Building, 12th Floor
Bismarck, ND 58505-0480
(701) 328-2413

Larry V. Nisley
Indiana Utility Regulatory Commission
302 West Washington Street, Suite E306
Indianapolis, IN 46204
Phone: (317) 232-2717

Leo Haynos
Kansas Corporation Commission
1500 SW Arrowhead Road
Topeka, KS 66604-4027
(785) 271-3278

Charles R. Kenow
Minnesota Department of Public Safety
444 Cedar Street, Suite 147-N
Town Square
St. Paul, MN 55101-5147
(651) 296-9636

Clark Conklin
Nebraska State Fire Marshal
246 South 14th Street
Lincoln, NE 68508
(402) 471-9467

Edward M. Steele
Ohio Public Utilities Commission
180 East Broad Street, 12th Floor
Columbus, OH 43215-3793
(614) 644-8983

Martin C. Bettmann
South Dakota Public Utilities Commission
500 East Capitol Avenue
Pierre, SD 57501-5070
(605) 773-6347

Tom M. Stemrich
Public Service Commission of Wisconsin
610 North Whitney Way
PO Box 7854
Madison, WI 53707-7854
(608) 266-2800

Southwestern Region

Terry L. Fronterhouse
Arizona Corporation Commission
1200 West Washington Street
Phoenix, AZ 85007
(602) 542-3316

James M. Mergist
Louisiana Department of Natural Resources
PO Box 94275
Baton Rouge, LA 70804-9275
(225) 342-5585

Albino O. Zuniga
New Mexico Public Regulation Commission
PO Drawer 1269
Santa Fe, NM 87504-1269
(505) 827-3772

Dennis Fothergill
Oklahoma Corporation Commission
PO Box 52000
Oklahoma City, OK 73152-2000
(405) 521-2258

Mary L. McDaniel
Railroad Commission of Texas
Gas Service Division
Capitol Station
PO Box 12967
Austin, TX 78711-2967
(512) 463-7058

Western Region

Zee Wong
California Public Utilities Commission
505 Van Ness Avenue, Room 2103
San Francisco, CA 94102
(415) 703-2209

Bob Gorham
California State Fire Marshal
1131 South Street, Box 944246
Sacramento, CA 94244-2460
(562) 497-9100

Steve Pott
Colorado Public Utilities Commission
Logan Tower-Office Level 2, Room 340
1580 Logan Street
Denver, CO 80203
(303) 894-2000 X 351

Richard VanDrunen
Hawaii Public Utilities Commission
465 South King Street, #103
Honolulu, HI 96813-2909
(808) 586-2043

Ron Law
Idaho Public Utilities Commission
472 West Washington
PO Box 83720
Boise, ID 83720-0074
(208) 334-0330

Craig Steele
Public Utilities Commission of Nevada
1150 East William
Carson City, NV 89701
(775) 687-6046

Kent Evans, PhD
Utah Division of Public Utilities
160 East 300 South
PO Box 146751
Salt Lake City, UT 84114-6751
(801) 530-6667

Jon F. Jacquot
Wyoming Public Service Commission
2515 Warren Avenue, Suite 300
Cheyenne, WY 82002-0230
(307) 777-5741

Dennis Crawford
Montana Public Service Commission
1701 Prospect Avenue
PO Box 202601
Helena, MT 59620-2601
(406) 444-6182

Jack P. Dent
Oregon Public Utilities Commission
550 Capitol Street, NE
Salem, OR 97310-1372
(503) 378-6760

Dennis E. Lloyd
Washington Utilities and Transportation Commission
1300 South Evergreen Park Drive, SW
PO Box 47250
Olympia, WA 98504-7250
(360) 664-1319

APPENDIX B

FORMS

LP GAS UNDERGROUND TANK AND GAS LINE INSPECTION

COMPANY: _____

This form is to be completed each time an LP gas line is uncovered for inspection or any other reason, such as making service connections, main extensions, replacements, etc.

DATE: _____

01. Location:_____

02. Name of Inspector:_____

03. Designation: Tank _____ Main _____ Service _____

04. Age of Pipe/Tank: _____ Years Line/Tank Size: inches/gals. _____

05. Maximum Operating Pressure: _____

06. Pipe Specification: Steel _____ Plastic _____ Copper _____

07. Cathodic Protection Tank/Line: Yes _____ No _____

08. Coating: Yes _____ No _____

09. External Condition: Smooth _____ Pitted _____ Depth of Pits _____

10. Internal Condition: Smooth _____ Pitted _____ Depth of Pits _____

Name any existing conditions that could cause harm to the LP gas system.

_____

Corrective Measures Taken if Needed:

_____

_____

Anodes Installed: How many? _____ Size _____ Location _____

Soil conditions surrounding tank/pipe: _____

LP GAS SYSTEM LEAK SURVEY REPORT

COMPANY: _____

Receipt of Report: _____

Date: _____ Time: _____

Location of Leak: _____
(address, intersection, etc.)

Reported by: _____

_____
(Name) (Address)

Description of Leak: _____
(inside/outside)

Leak Detected by: _____

Leak Reported by: _____

Report Received by: _____

Dispatched
Date: _____ Time: _____

Investigation Assigned to: _____
(Name)

Assigned as Immediate Action Required? Yes _____ No _____

Investigation
Date: _____ Time: _____

Investigation by: _____ Leak Found? Yes _____ No _____

CGI Used? Yes _____ No _____ Leak Grade: 1 2 3

Location of Leak: _____

Cause of Leak: _____

Condition Made Safe: Date: _____ Time: _____
Repair
See form 3

LP GAS SYSTEM REPAIR REPORT

COMPANY: _____

ADDRESS: _____
_____
_____

Grade of Leak

Grade I _____
Grade II _____
Grade III _____

SKETCH SHOWING LEAK/S LOCATED

METER SET

Meter No. _____
(if inspected)

LEAK DATA

Detected By		Collecting		Probable Source		C.G.I. Test	
CGI Meter/ Bar Hole		In Building		Mainline		Gas Percent (%)	
Odor		Near Building		Service Line		L.E.L.	
Flame Pack		In Manhole		Tank/s			
Visual/Vegetation		In Soil		Valve			
Other		In Air		Meter Set			
		Other		Service Tap			

Pressure at leak		Surface		Leak Course	
Tank pressure		Lawn		Corrosion	
1st stage piping pressure		Soil		Outside Force	
2nd stage piping pressure		Paved		Construction Defect	
		Other		Material Failure	
				Other	

Component	Explanation	Part of System		Material Type	Size	Year Installed
Pipe		Main		Steel		
Valve		Service		Plastic		
Fitting		Meter Set		Copper		
Regulator		Customer Piping		Other		
Other		Tank/s				
		Other				

Pipe/Tank/s Condition: Good: _____ Fair: _____ Poor: _____

Coating Condition: Good: _____ Fair: _____ Poor: _____

Date Repaired: _____Date Rechecked: _____

Remarks: _____

Signed:_____

PATROLLING OF LP GAS SYSTEM

An LP gas system must be patrolled where anticipated physical damage might occur on the system resulting in failure or leakage to that portion of the system. Extreme weather conditions might cause conditions on systems that would require patrolling.

Frequency: When patrolling is required then the frequency of the patrol is as often as necessary, but no less than :

Business district; 4 times each calendar year, not exceeding intervals of 4½ months.
Outside business district; 2 times each calendar year, not exceeding intervals of 7½ months.

COMPANY: _____

Period Covered: Began: _____

Ended: _____

Areas Covered: _____

Map References: _____

Leakage Indications Discovered (describe locations and indications, such as a condition of vegetation):

_____

_____

Describe any unusual conditions and their locations in the system: _____

_____

Other Factors noted which could affect present or future safety or operations of the gas system:

_____

_____

Follow-up (repairs, maintenance or test resulting from this inspection): _____

_____

Comments: _____

_____

Signature of person in charge of patrol: _____

Date: _____

REGULATOR INSPECTION REPORT

COMPANY: _____

Location: _____

Regulator # 1

Make: _____ Model: _____

Size: _____ Orifice Size: _____

Pressure at inlet:_____ Pressure at outlet:_____

M.A.O.P. of System to which it is connected: _____

Regulator # 2

Make: _____ Model: _____

Size: _____ Orifice Size: _____

Pressure at inlet: _____ Pressure at outlet: _____

M.A.O.P. of System to which it is connected: _____

Regulator # 3

Make: _____ Model: _____

Size: _____ Orifice Size: _____

Pressure at inlet: _____ Pressure at outlet: _____

M.A.O.P. of System to which it is connected: _____

Does regulator have an internal relief valve? Yes_____ No _____

Was regulator checked for lock up? Yes_____ No _____

Is regulator protected against damage from outside forces? Yes_____ No _____

Was vent and screen checked for blockage? Yes_____ No _____

Signature: _____

Date: _____

EXTERNAL RELIEF VALVE INSPECTION REPORT

COMPANY: _____

Location: _____

Relief Valve Information

Make: _____ Type: _____

Size: _____ Orifice Size: _____

Type of Loading:

Spring: _____ Pilot: _____ Other: _____

Range: _____

Pressure Setting: _____

Connecting Pipe Size: _____

Vent Stack Size: _____

Capacity:

General Condition of:

Relief Valve: _____

Support Piping: _____

Weather Protection: _____

General Area: _____

Repairs Required: _____

_____

_____

Repairs Made: _____

_____

Remarks: _____

_____

Inspector: _____

Signature: _____ Date: _____

KEY VALVE INSPECTION REPORT

Frequency: - annually

System: Name: _____

Location: _____

Number of Valves: _____

Location /Type / Use	**Results / Actions**
_____	_____
_____	_____
_____	_____
_____	_____
_____	_____
_____	_____

General Comments: _____

_____

_____

_____

Signed:_____

Dated: _____

PLOT PLAN

Prepared By: _____ Date Prepared: _____

System: Name:_____

Location:_____

(System map showing tanks, mains and service lines with tank and pipe sizes and distances, key valve locations, cathodic protection system, regulators and pressures and other utility lines.)

SNIFF TEST REPORT

Frequency: At a minimum, each time LP gas is delivered to an operator's plant or when LP gas by-passes the plant. Note: In large systems it may be necessary to use instrumentation to verify the odorant at certain locations of the system.

System: Name _____

Location: _____

Test Point: _____

Date: _____ Time: _____ Test Person: _____

Odor Level: Nil: _____ Barely Detectable: _____ Readily Detectable: _____ Strong: _____

Test Point: _____

Date: _____ Time: _____ Test Person: _____

Odor Level: Nil: _____ Barely Detectable: _____ Readily Detectable: _____ Strong: ____

Test Point:
Date: Time: Test Person:

Odor Level: Nil: Barely Detectable: Readily Detectable: Strong:

Remarks:_____

_____

_____

Signed:_____

TELEPHONIC REPORT OF CUSTOMER LEAK

COMPANY: _____

Customer Leak Information

Time Call Received: _____ a.m./p.m. Date: _____
Name of Caller: _____ Caller's Phone Number: _____
Name of Customer if not Caller: _____
Address of Leak: _____
_____
_____

Nature of Complaint: Odor ( ) Blowing Gas ( ) Dead Vegetation ( )
Other (describe): _____
_____

Is the gas odor or sound inside the residence? Yes _____ No _____
If so, where is it located? (at the water heater, at the heating system, at the stove, in the hall, in the
kitchen, etc.): _____
_____

Is the gas odor or sound outside the residence? Yes _____ No _____
If so, where is it located? (at the meter, near the street, at the house, at the tank/s, at the pool, at the gas grill, etc.): _____
_____

How long have you been smelling or hearing the gas? _____
Will someone be home for us to check the leak? Yes _____ No _____

Leak Response Information

Time Dispatched Investigator: _____ am/p.m. Date: _____
Name of Investigator: _____
Time of Investigator's Arrival at Scene of Leak: _____ a.m./p.m.
Action Taken: _____
_____
_____
_____

Time of Investigator Completion at Scene of Leak: _____ a.m./p.m.
Additional Follow-up (if needed): Yes _____ No _____
If so, what type of follow-up: _____
_____
_____

Additional Remarks: _____
_____

Signature of Investigator: _____
Signature of Supervisor: _____

ATMOSPHERIC CORROSION CONTROL INSPECTION

Frequency: A minimum of every three years although it is recommended to inspect the system for atmospheric corrosion annually during other annual inspection requirements.

System: Name_____

Location: _____

Type of Structure: Tank / size and age: _____ Main / size and age: _____

Service / size and age: _____ Operating Pressure: _____

Condition of paint and surface of:

Tanks: _____

Piping: _____

Meters: _____

Fittings: _____

Vaporizers: _____

Other: _____

Corrective Measures to be taken: _____

_____

Signed: _____

Dated: _____

Cathodic Protection Survey

Frequency: Annually

System Name: _____

Location: _____

Surveyed By: _____ Date Surveyed: _____

Starting Location of Survey: _____

Ending Location of Survey: _____

Underground Tank/s : Yes _____ No _____

Readings Around Tank(s) Remote From Anodes:

Reading #1 _____

Reading #2 _____

Reading #3 _____

Reading #4 _____

Take copper sulfate half-cell readings at approximately 20 foot intervals along the mains and service lines.

FT	RDG	FT	RDG	FT	RDG	FT	RDG

Signed: _____ Date: _____

CORROSION CONTROL – RECTIFIER INSPECTION

COMPANY: _____

LOCATION: _____

BRAND OF RECTIFIER: _____

RECTIFIER SERIAL NUMBER: _____

Date	Supply Voltage	Output Volts	Output Amps	Rectifier Condition	Remarks

Signature:_____ Date: _____

PIPELINE TEST REPORT

OPERATING COMPANY: _____

Testing Company: _____

This form must be completed for each section of newly installed section of pipe or service line and on each service line that is disconnected from the main for any reason.

Test Data

Type of Pipe: _____

Size of Pipe: _____ inches Length of Line: _____

Location of Line: _____

_____

_____

_____

Tested with: Nitrogen ( ) Air ( ) Propane Vapor ( ) Water ( )

Other (describe): _____

Time Started: _____ a.m./p.m. Time Ended: _____ a.m./p.m.

Test Pressure Start: _____ psig

Test Pressure Stop: _____ psig

Line Loss noted? : Yes _____ No _____

Reason for Line Loss: _____

_____

_____

_____

Corrective Measures Taken: _____

_____

_____

_____

Remarks: _____

_____

_____

Company Representative: _____

Signature: _____ Date: _____